Type	Value
Max Weight	6.6 kg / 14.6 lb
IP Class	IP20 C
Nema Class	CHASSIS

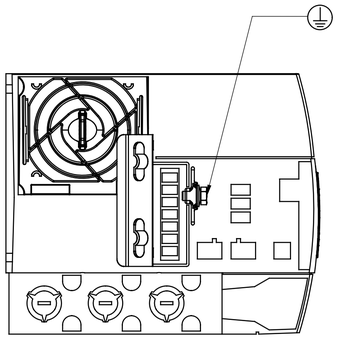

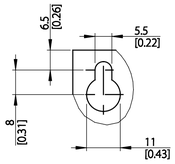

DETAIL A
SCALE 1:1

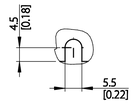

DETAIL B
SCALE 1:1

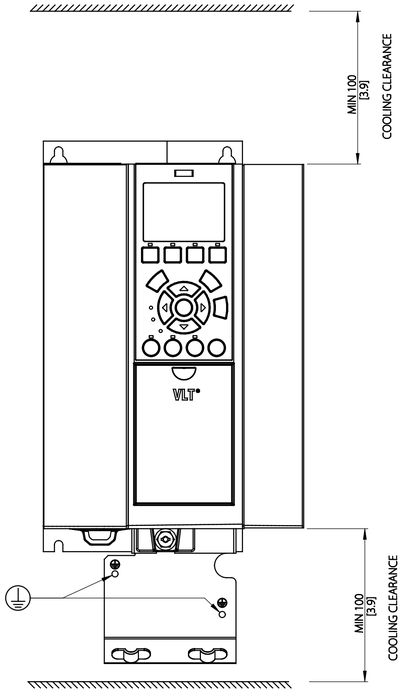

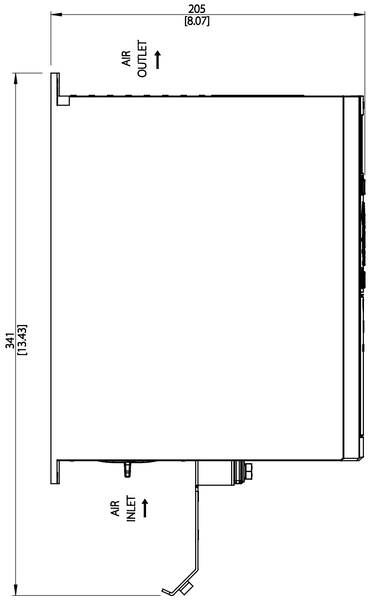

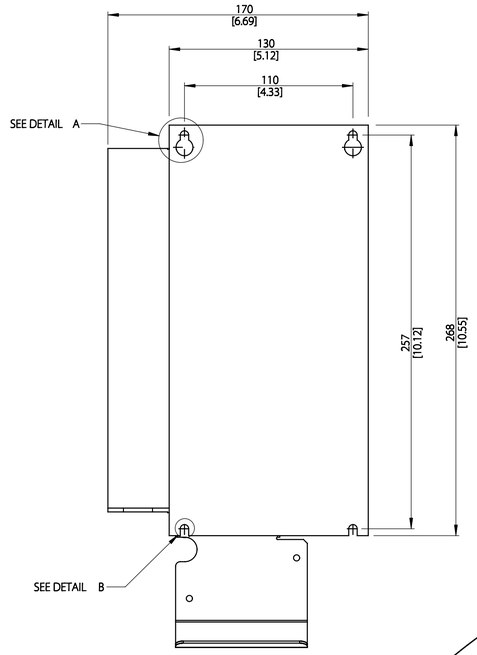

MOUNTING BASE

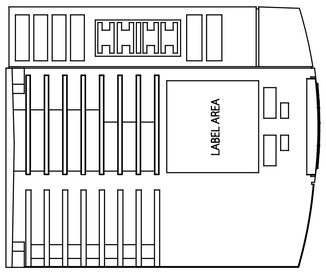

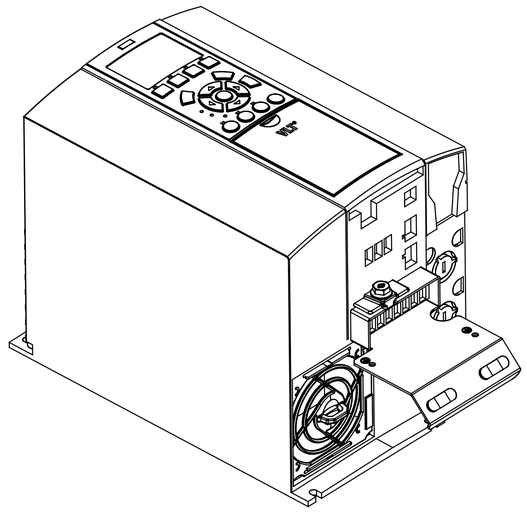

THIS DRAWING SHOWS THE MOST COMMON VERSION OF THIS PRODUCT VARIANT.
SMALL DIFFERENCES MAY OCCUR DEPENDING ON THE FINAL PRODUCT CONFIGURATION.

CENTER OF GRAVITY:
FOR REFERENCE ONLY, THE PRODUCT CONFIGURATION MAY INFLUENCE THE CG IN ALL THREE AXES.

UNLESS OTHERWISE SPECIFIED THE TOLERANCE IS ± 1MM [0.4 INCH].
ALL DIMENSIONS ARE IN MILLIMETERS [INCH]

FIRST ANGLE PROJECTION | SCALE 1:2 | DRAWING SIZE A1 | MATERIAL | FINISH

CHANGED		
DESIGNED	DANFOSS	09-01-2016
CHECKED		

DESCRIPTION: MCAD A3 IP20 C

PROPERTY OF DANFOSS A/S NORDBORG, DENMARK. TWO OR THREE DIMENSIONAL REPRODUCTION OF CONTENTS TO BE AUTHORIZED BY DANFOSS A/S.

DRAWING NUMBER: MCAD-A3-IP20-C | REV 001
MODEL: MCAD-A3-IP20-C | SHEET 1 OF 1