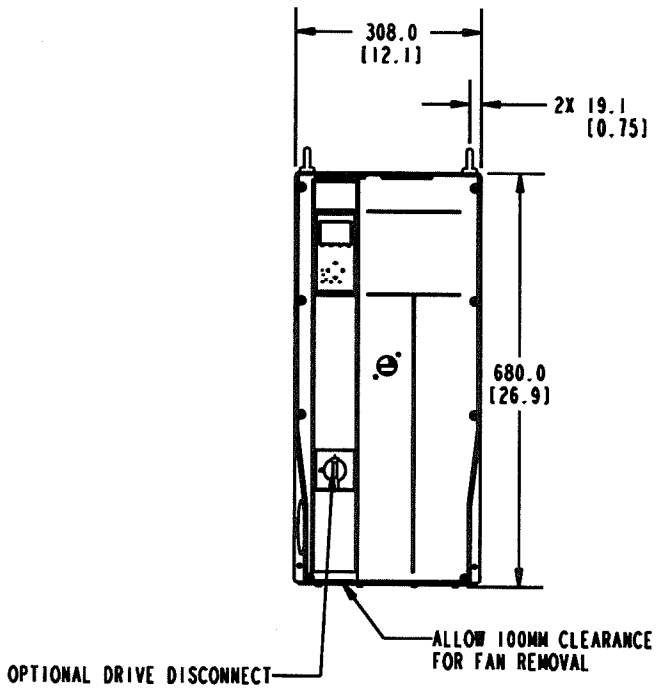

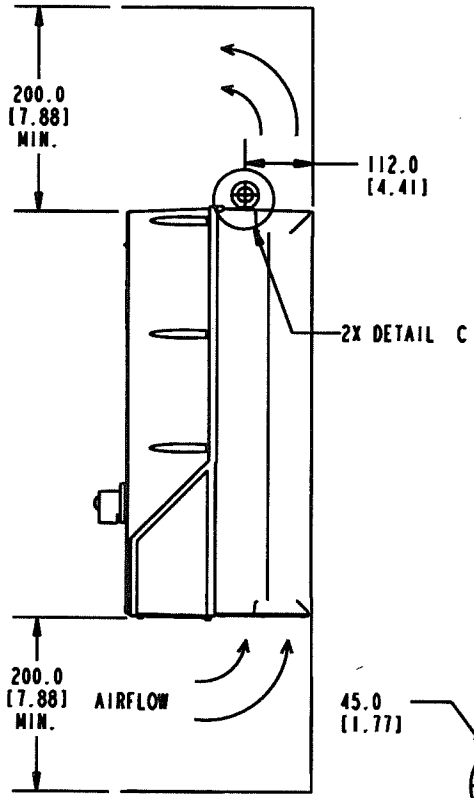

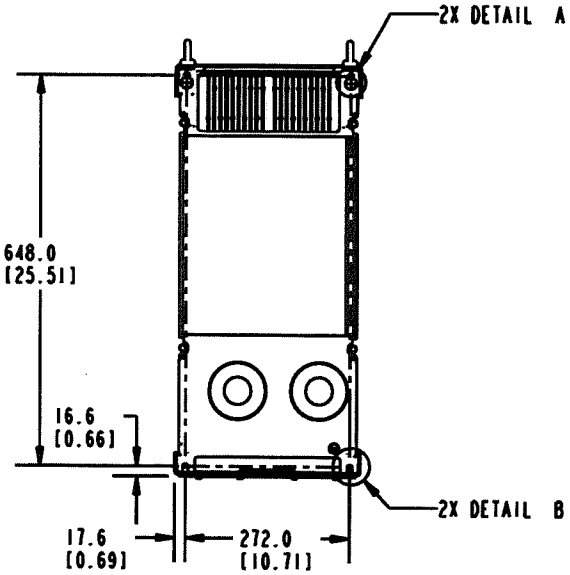

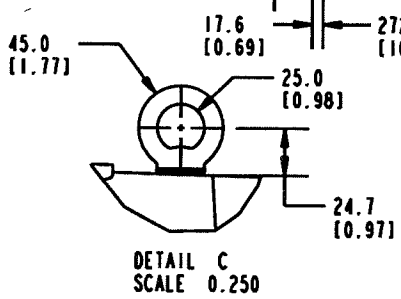

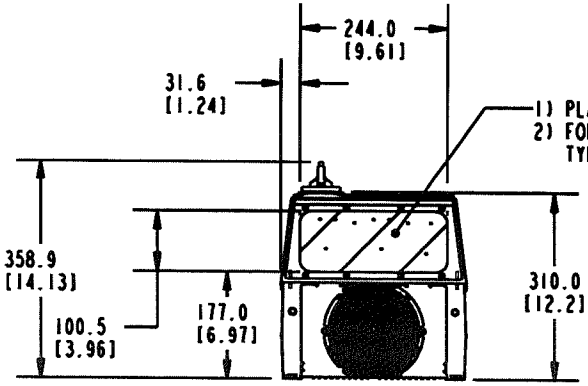

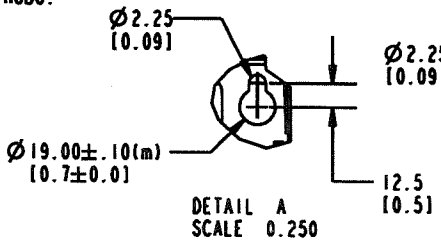

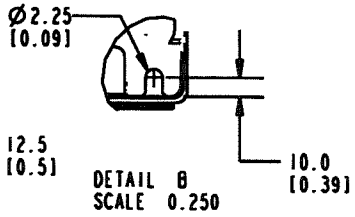

(C)

FRAME SIZE C1		
VOLTAGE	HP	KW
208/230	25-40	18.5-30
460/600	50-75	37-55

UNIT COOLING:

THE UNIT MUST BE INSTALLED VERTICALLY WITH THE MINIMUM FREE SPACE. ALL IP21/UL NEMA TYPE 1 AND IP54/NEMA TYPE 12 UNITS MAY BE MOUNTED SIDE BY SIDE WITH NO MINIMUM CLEARANCE.

- NOTICE -

THIS DOCUMENT CONTAINS PROPRIETARY INFORMATION OF DANFOSS DRIVES. IT IS LOANED BY DANFOSS DRIVES SUBJECT TO THE CONDITIONS THAT IT AND THE THE INFORMATION EMBODIED THEREIN SHALL BE USED ONLY FOR RECORD AND REFERENCE PURPOSES, SHALL NOT BE USED OR CAUSED TO BE USED IN ANY WAY PREJUDICIAL TO THE INTERESTS OF DANFOSS DRIVES, SHALL NOT BE REPRODUCED OR COPIED IN WHOLE OR IN PART OR DISCLOSED TO ANYONE WITHOUT THE DIRECT WRITTEN PERMISSION OF DANFOSS DRIVES, AND SHALL BE RETURNED UPON REQUEST.

PRO-E ENTRY BY/DATE: JM 08/01/06	CHECKED BY/DATE: 05/09/08	DANFOSS DRIVES				
DESIGNED BY/DATE:	MFG. APPROVAL BY/DATE					
APPROVAL:	ENG. APPROVAL BY/DATE 5/9/08	TITLE: DWG,REF,SUBMITTAL,C1-TIER 1				
LATEST E.C.N. NO.: SP08035	E.C.N. PRO-E ENTRY BY/DATE: DK 5/7/08	PLOT SCALE: NONE	PRO-E FILE: P404_C1_650	SHEET: 1	OF: 1	DRAWING NO.: 176U8477	REV.: C