| Type | Value |
|---|---|
| Max Weight | 6.6 kg / 14.6 lb |
| IP Class | IP20 C |
| Nema Class | CHASSIS |

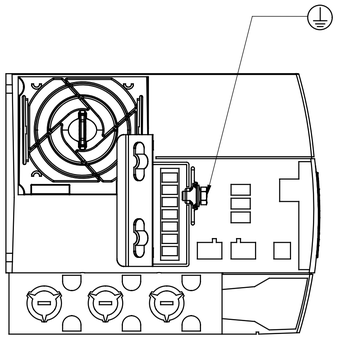

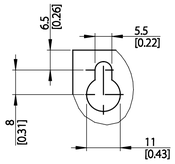


DETAIL A
SCALE 1:1

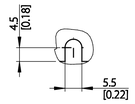


DETAIL B
SCALE 1:1

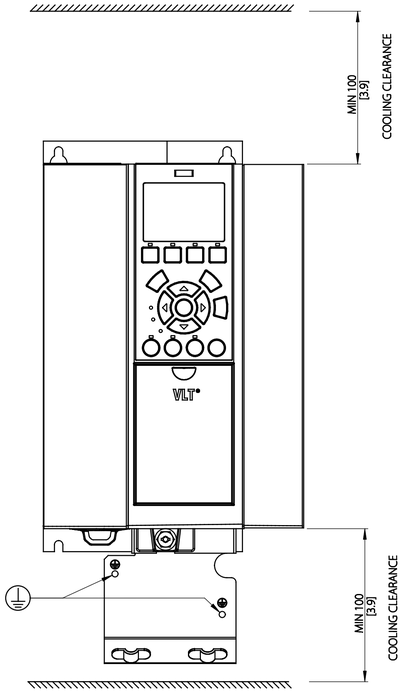


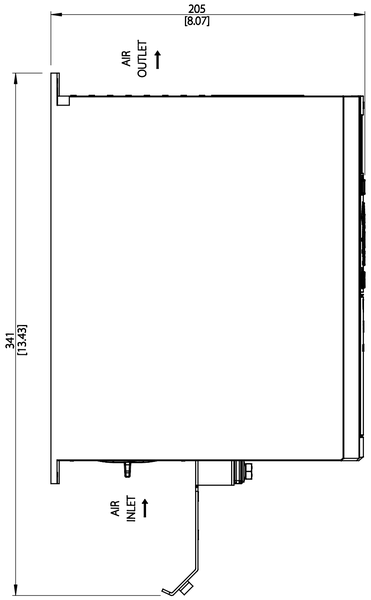


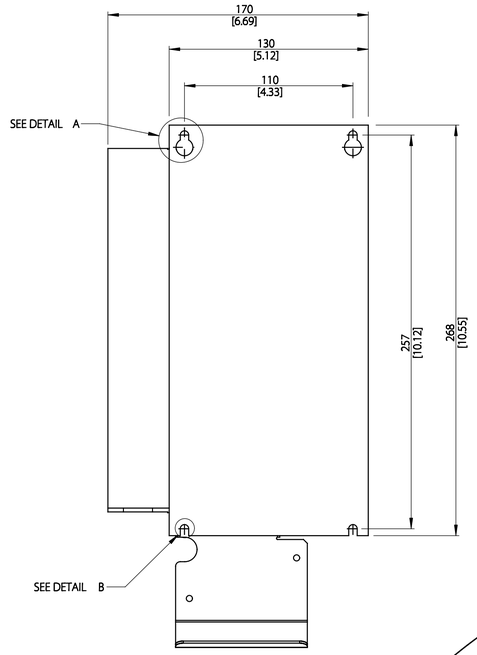


MOUNTING BASE

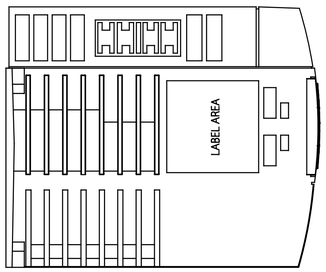


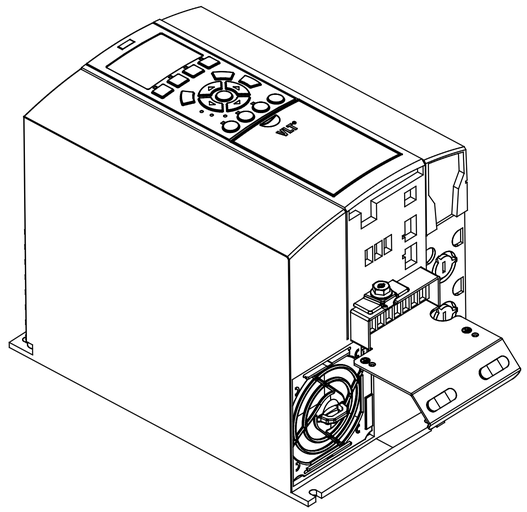

THIS DRAWING SHOWS THE MOST COMMON VERSION OF THIS PRODUCT VARIANT.
SMALL DIFFERENCES MAY OCCUR DEPENDING ON THE FINAL PRODUCT CONFIGURATION.

CENTER OF GRAVITY:
FOR REFERENCE ONLY, THE PRODUCT CONFIGURATION MAY INFLUENCE THE CG IN ALL THREE AXES.

UNLESS OTHERWISE SPECIFIED THE TOLERANCE IS ± 1MM [0.4 INCH].
ALL DIMENSIONS ARE IN MILLIMETERS [INCH]

FIRST ANGLE PROJECTION | SCALE 1:2 | DRAWING SIZE A1 | MATERIAL | FINISH

| | | |
|---|---|---|
| CHANGED | | |
| DESIGNED | DANFOSS | 09-01-2016 |
| CHECKED | | |

DESCRIPTION: MCAD A3 IP20 C

PROPERTY OF DANFOSS A/S NORDBORG, DENMARK. TWO OR THREE DIMENSIONAL REPRODUCTION OF CONTENTS TO BE AUTHORIZED BY DANFOSS A/S.

DRAWING NUMBER: MCAD-A3-IP20-C | REV 001
MODEL: MCAD-A3-IP20-C | SHEET 1 OF 1