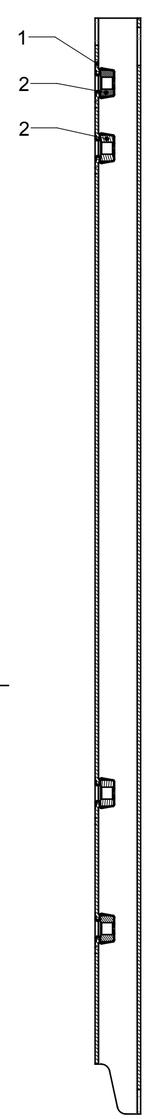

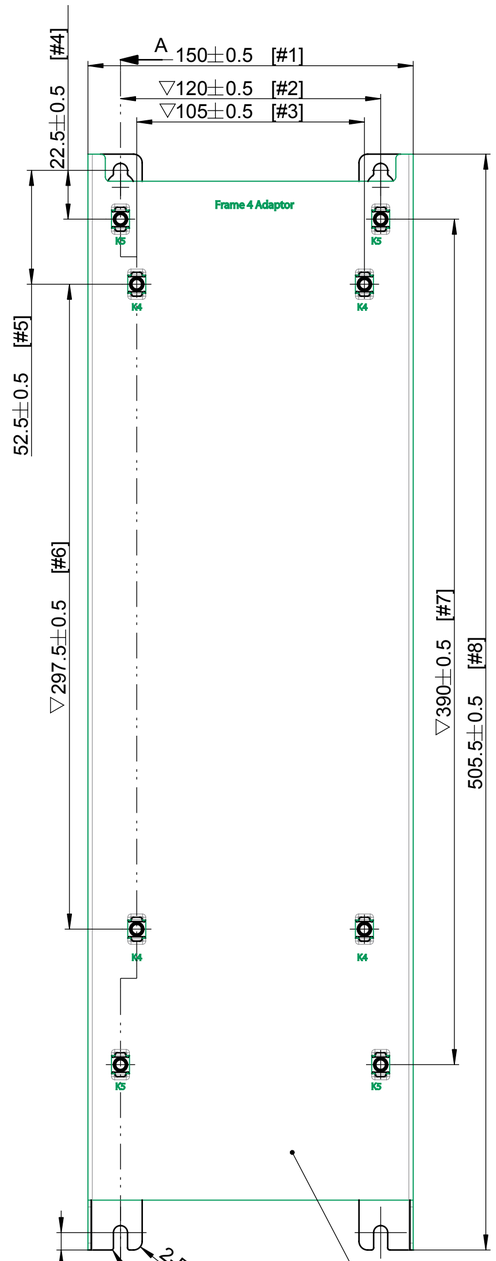

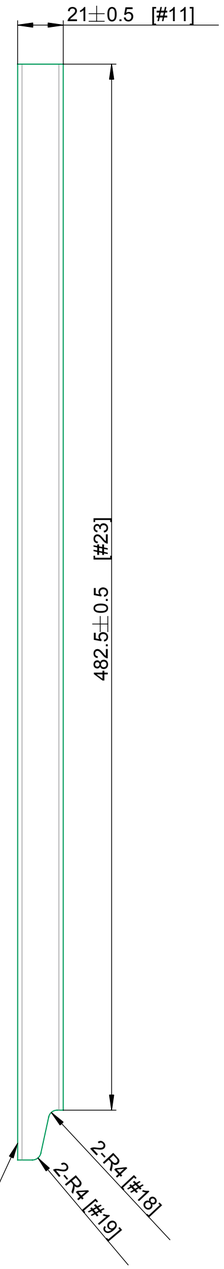

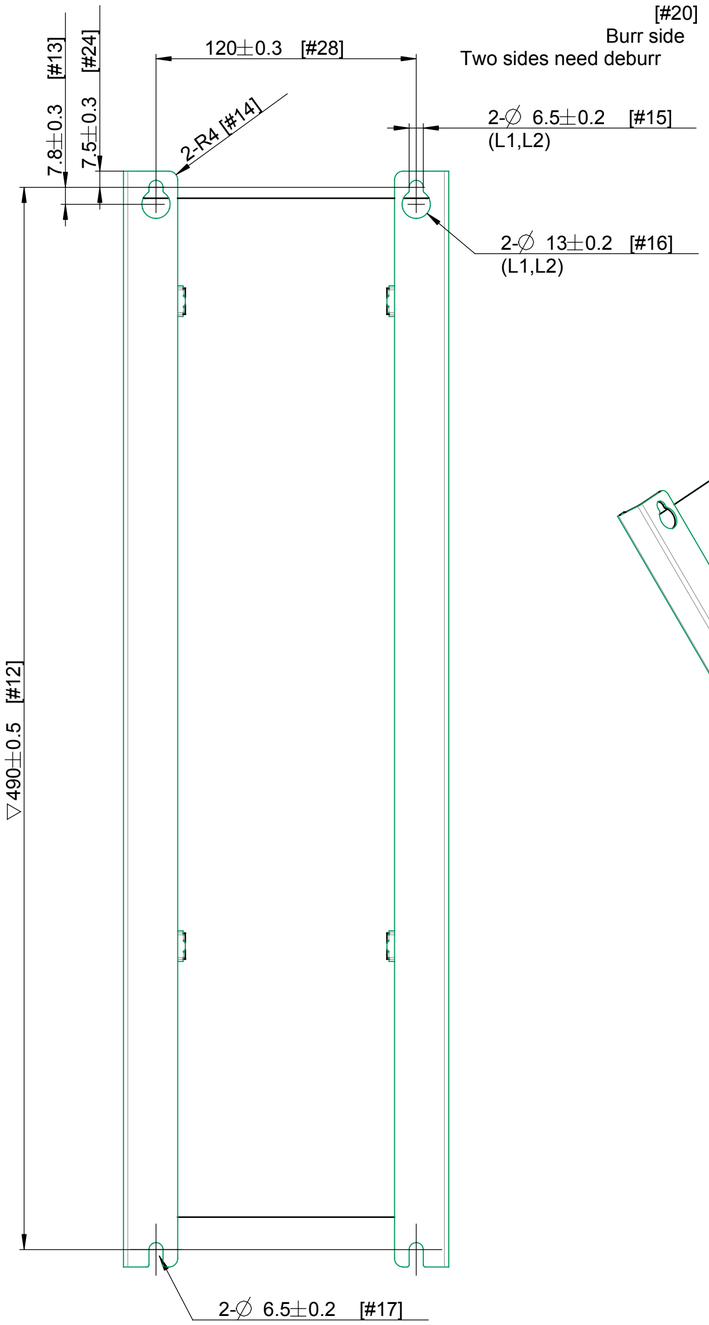

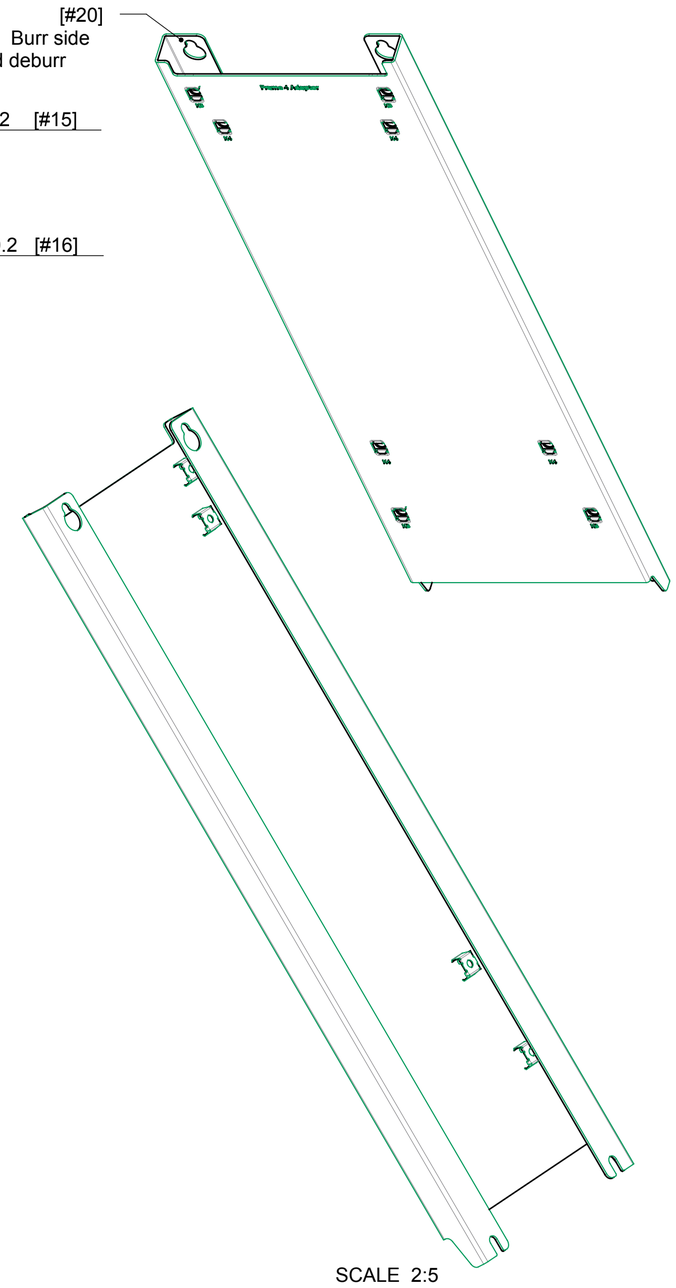

SCALE 2:5

SECTION A-A

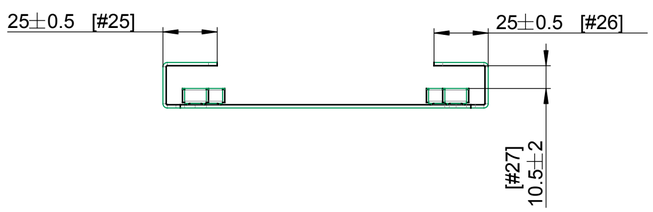

(8)
2-R4 [#9]
4-R1 [#10]
A

0.5 Ⓜ [#21]

0.5 Ⓜ [#22]

Note:
1) ▽ Critical Characteristic dimension no.2,3, 6,7,12
2) General inner bending radius : 0.5 mm
3) Tolerances for not specified dimensions: ±0.25
4) Corner rounds not specified: R0.5±0.2
5) Part must be washed and degreased
6) No impact marks acceptable
7) Scratches to be avoived on visible surfaces
8) Material specification:
1.5 mm Sheet acc. to EN 10346 DX51D AZ150-N-A-C
9) Not specified dimensions according to unfolded part
10) Part must compliance with RoHS Directive 2011/65/EU
11) Sheet metal plate VOLUME = 167657MM^3

No.	Item	Quantity	Description
1	Metal Plate	1	1.5 mm Sheet acc. to EN 10346 DX51D AZ150-N-A-C
2	M6 Cage Nut	8	Bossard BN3307 Article-No. - 1538322

PDM controlled drawing.
Hard copy not valid without
frozen date in ID Stamp

Projection | Scale 1:2 | Size A2 | Material See Note

Replace
Designer Peter Peng 2015-06-25

Danfoss

Designation \ Name
FC280 to VLT2800 mounting
Adaptor 4

Confidential: Property of Danfoss Power Electronics A/S, Graasten, Denmark. Not to be handed over to, copied or used by third party. Two- or three dimensional reproduction of contents to be authorized by Danfoss Power Electronics A/S.

No. 132B3775 Rev. 001
Sheet 1 of 1

Model: K4K5_ADAPTOR_ASSY.ASSEM