TECHNICAL DATA

LISTEN. THINK. SOLVE.®

BULLETIN 1492

Digital/Analog Programmable Controller Wiring Systems

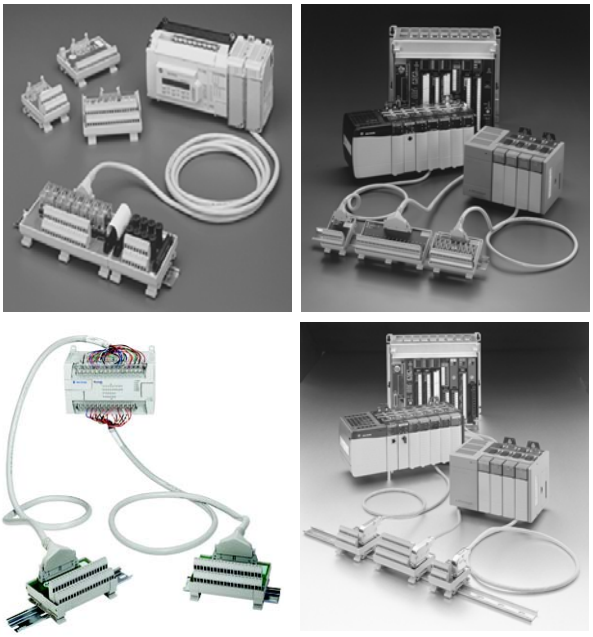

Bulletin 1492 Digital and Analog Wiring Systems

Table of Contents

Description	Page
Benefits	3
Options and Features	
Digital (IFM/XIM and Cables)	6
Analog (AIFM and Cables)	21
Ordering Digital and Analog Wiring Systems	28
Selection Tables	29
Specifications	
Digital IFM	68
Digital Cable	138
Analog Cable	168
Dimensions	180
Marking System	181
Accessories	184
Web Site Information	186
Quick Reference	187

Allen-Bradley • Rockwell Software

Rockwell Automation

Description

Connecting to Allen-Bradley PLC I/O is fast, convenient, and reliable with the Allen-Bradley Bul. 1492 wiring system. Unlike conventional terminal blocks, the Bul. 1492 wiring system connects to digital, analog, and high speed counter PLC I/O modules through pre-wired and pre-tested cables. The Bulletin 1492 wiring systems are compatible with modular I/O modules for Bulletin 1756 ControlLogix, 1769 CompactLogix, 1746 SLC 500, and 1771 PLC-5. A select group of wiring system modules are also compatible with the base I/O of the MicroLogix 1200 (40 I/O base only) and 1500 packaged controllers, plus the PowerFlex 700H and 700S drives. In addition, wiring system solutions are available for 1794 Flex I/O through the Flex D-shell type base modules, 1794-TB37DS and 1794-TB62DS. The interface modules are mounted onto a standard DIN #3 Rail. Pre-printed adhesive label cards containing field-wiring information are included for each interface module and I/O module combination.

Benefits

Reduced Wiring Time

PLC I/O module to field device wiring is completed in a fraction of the time when Bulletin 1492 wiring systems are used as compared with the traditional method of wiring each point to the PLC I/O swing arm and field-side terminal blocks. Pre-wired cables are factory-wired to the I/O wiring arm on one end and a connector for the Interface Module (IFM) on the other. IFMs enhance the capability of the I/O systems with added terminations, field-side LED status indicators, isolation circuits, overcurrent protection, and higher amp outputs. Both standard and specific build to order length cables are available, providing the correct length for any panel in a neat, space-efficient wiring solution.

Reduced Wiring Errors

Wiring system cables are pre-tested to ensure 100% accurate connections and eliminate the need for point-to-point checking of wiring—no more crossed wires and loose connections between the I/O module and the terminal block. Even one error in wiring 128 I/O points in a point-to-point system may require a complete check of the wiring. Wiring errors can take several minutes or hours to track down and correct before the panel is ready for startup.

When IFMs and cables are snapped in place, they fit every time — no need to find the wrong or loose connection, resulting in a much higher rate of success at system startup.

Faster Troubleshooting and Easier Maintenance

Normal terminal blocks can't offer the benefits of Bulletin 1492 wiring systems, such as LED indication on each I/O point. Wiring systems improve system startup and ease troubleshooting and maintenance. Diagnostic capabilities in the form of fuses, blown fuse indication, and field-side ON-

State LEDs — in a reduced space — allow maintenance personnel to quickly locate faults, reduce downtime, and improve overall productivity.

Benefits, Continued

Increased Volume and Productivity

Cable interconnections for a Bulletin 1492 wiring system can be up to 30 times faster to install than traditional point-to-point wiring, enabling OEMs and panel builders using wiring systems to build panels faster and produce more machines.

Reduced Wire Preparation and Routing

Pre-wired Bulletin 1492 wiring system cables eliminate the time and costs associated with stripping and cutting wires. Routing wires is much easier with wiring systems, since engineers only have to worry about routing one pre-wired cable versus the 20 or 40 wires needed in the traditional wiring method.

Labeling and Marking

Pre-printed, PLC I/O-specific adhesive label strips for quick marking of IFM module terminals save labor compared with point-to-point wiring that requires labor-intensive wire markers. Pre-wired cables require no wire labels. Pre-printed I/O-specific labels ensure neat, easy-to-read identification of wires and I/O points for all users.

The marking of traditional terminal blocks has even caused some OEMs to move toward a high-tech approach of plotting markers, requiring additional equipment in the form of a plotter system and a PC to run the plotter software.

Simplified Design

Design engineers can simplify their panel drawings by calling out an IFM and pre-wired cable instead of having to detail every single wire and terminal block on their drawings. Simplified panel drawings aid both the installer and the end user who receives the panel.

Increased DIN Rail Density

An increasing trend in the industry is to pack more products into the same DIN Rail space. Wiring systems support this trend, as they require less DIN Rail space than traditional terminal blocks. For example, if an OEM were to use a 40-point IFM in place of 40 terminal blocks, DIN Rail space can be reduced by more than 50%.

Benefits, Continued

Increased DIN Rail Density, Continued

All IFMs have terminals for connecting the I/O field wiring. In addition, extra terminal, sensor, fusible IFMs, and relay IFMs contain common terminals that are used as power busses for sensors and actuators. No additional terminal blocks are needed to provide power to the sensors/actuators — saving valuable panel/DIN Rail space.

To further reduce panel space, narrow IFMs (e.g., Catalog Number 1492-IFM20FN) have been designed. They require 45% less space than the standard length IFMs, making them well-suited for tightly packed enclosures. The high-density narrow IFMs have two rows of 10 field-wiring terminals with an overall length of 60 mm (2.36 in.).

Quality-Looking Panels

The pre-wired cables and IFM wiring system modules organize the wiring in your panel and provide a consistent look. Pre-printed adhesive labels for the terminals neatly identify field-wiring connections, which correspond to the I/O module address. A large marking area is also available for identifying I/O information on the IFM.

Fewer Parts, Less Inventory and Lower Carrying Cost

A wiring system involves an IFM and the cable, versus the block, barrier, jumper, markers, wires, and swing arms associated with traditional hardwired systems. Therefore, it requires fewer components and, in turn, less inventory and lower carrying costs.

Design Flexibility

To develop a cost-effective system, the hardware components must meet the needs of the design engineer. Rockwell Automation provides the broadest range of digital and analog systems in the industry. Allen-Bradley Wiring Systems deliver a lower life-cycle cost.

Digital IFM Options and Features

Digital IFMs, similar to groups of terminal blocks, are available with either 20-pin (typically 8 to 16 PLC I/O points) or 40-pin (typically 16 to 32 PLC I/O points) cable connectors. The number of field-side wiring terminals varies with the type of module — from one to three terminals per I/O point. LEDs and fuse clips are available on-board the IFMs to customize your wiring system to your application and provide assistance with troubleshooting your control panel. The IFMs are compatible with both the pre-wired cables and the IFM-ready cables.

All of the digital IFMs have the following features:

cULus: Hazardous Locations: Class I Div 2 (all modules, except those with relays); Groups A, B, D, and D.
Temperature Code: T3C @ 60 °C.
UL File No. E10314, Guide No. NRAG
cULus: Ordinary Locations; Module with relays; UL File No. E113724 Guide No. NRAQ
CE Compliant for all applicable directives

Refer to Specifications, page 191.

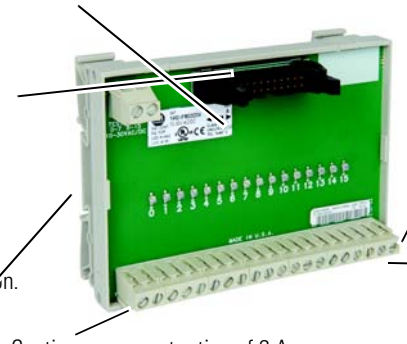

Digital IFM

Digital IFM Options and Features, Continued

Standard Terminal Modules

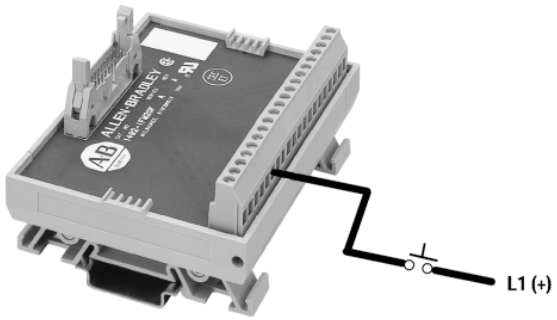

Standard terminal IFM modules provide **one field-side** wiring terminal per programmable controller input or output point, as well as enough terminals for the I/O module power connections. The standard terminal modules are ideal for applications in which the I/O device commons are terminated in the field or remotely from the I/O module panel.

Extra Terminal Modules

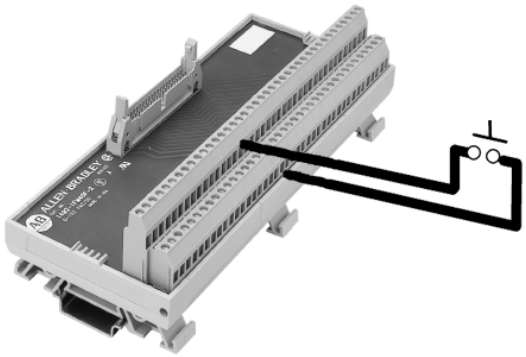

Extra terminal modules provide **two** or **four** field-side terminals per input or output point. IFMs which are not point-to-point isolated have two terminals per input or output point. Point-to-point isolated IFMs have two or four terminals per input or output point. Non-isolated IFMs have the lower row of extra terminals commoned together in groups of 10 ❶, to serve as a power bus for the field device commons. Isolated IFMs have terminals isolated into 8 or 16 groups, which allows each group of I/O devices to reference a different power source. The extra terminal modules are beneficial in applications in which the I/O devices are terminated within the same panel as the I/O modules — eliminating the need for many additional terminal blocks. These modules are also available with optional field-side status LEDs for troubleshooting inputs and outputs.

❶ Except Catalog Numbers 1492-IFM20D24A-2 and -IFM20D120A-2, which are in groups of 20.

Digital IFM Options and Features, Continued

Sensor Modules

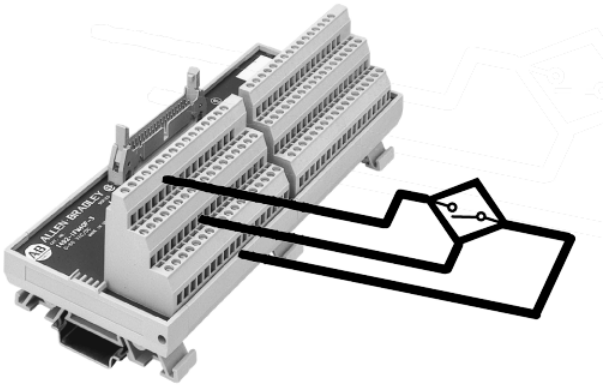

Sensor modules provide **three** field-side terminals per input point. The middle and lower rows of terminals, commoned together in groups of 18, serve as power busses for 3-wire sensor types of devices — eliminating additional terminal blocks and jumpering systems. The sensor modules provide a compact method of terminating and powering 24V AC/DC or 120V AC (Catalog Number IFM20F-3 only) 3-wire devices.

LED Modules

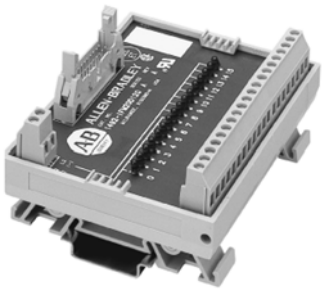

Voltage-indicating LEDs are available on the standard, extra terminal, and sensor IFMs. The LEDs provide field-side troubleshooting diagnostics: the on/off status of an input device or the on/off status of the programmable controller output circuit. When used in conjunction with the **logic**-side programmable controller LEDs, the IFM LEDs can help determine whether a problem resides in the I/O module or field device/wiring. The LED modules have unique circuitry that allows compatibility with sinking or sourcing input or output modules.

Digital IFM Options and Features, Continued

Fusible Modules

Fusible modules provide a convenient method of adding overcurrent protection into your programmable controller field wiring. These modules have 5 x 20 mm fuse clips on-board and are available with and without blown fuse indication. The 24V or 120V blown fuse indicators reduce the troubleshooting time to locate and replace a blown fuse on the IFM. The fusible modules have an easy-to-remove see-through acrylic cover to prevent objects from contacting fuse circuitry under normal operation. Standard fuse holders reside in the IFM, aiding in the removal of a fuse with a fuse puller (fuses are not included). The fusible modules also have two or four terminals per I/O point to create a power bus for input or output load connections. Fusible modules are available in both isolated and non-isolated versions. There are a select number of fusible IFMs available for input modules.

Relay and Relay Expander Modules

Relay and Relay Expander Interface Modules (XIMs) were developed to maximize the effectiveness of users' applications that require output contact ratings greater than 2 A. Driving large loads up to 10 A for applications such as motor starters is now possible with Bulletin 1492 Wiring Systems. In addition, the Relay Modules provide a means to isolate output points.

The Relay and Relay Expander product line consists of a Relay Master module and Expander Module(s) with expander cable. The 8 or 16 point Relay Master modules provide the connection for the 20- or 40-pin cable connectors for the pre-wired Bulletin 1492 cable.

Digital IFM Options and Features, Continued

Relay and Relay Expansion Modules, Continued

Relay Master

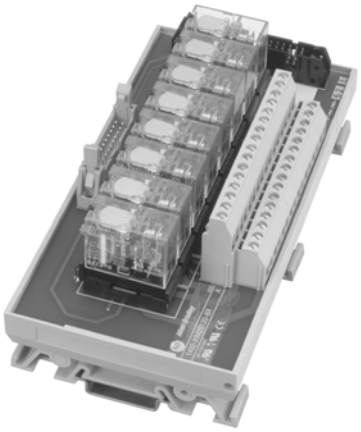

Relay Master with Fusing

Relay master XIMs feature field-replaceable relays with 120V or 24V rated coils. The field-side Form C contacts are rated 240V 10 A (de-rated to 12 A per adjacent pair on the XIM). The Form C relay output provides isolated output channels and a different voltage level from one output channel to the next. Other features include coil-side LED indicating the PLC output module status, and transient suppression on each coil. In addition, 16-point relay masters are available with or without 5 x 20 fuse holders so customers can fuse the output contacts.

Relay Expanders

Relay Expander (16) with Fusing

Relay expander XIMs feature eight field-replaceable relays with 120V or 24V rated coils. The field-side Form C contacts are rated 240V 10 A (de-rated to 12 A per adjacent pair on the XIM). The Form C relay output provides isolated output channels and a different voltage level from one output channel to the next. Other features include coil-side LED indicating the PLC output module status, and transient suppression on each coil. In addition, a relay expander can have 5 x 20 fuse holders so customers can fuse the output contacts. An expander cable is provided for connection to the mating module.

Digital IFM Options and Features, Continued

Relay and Relay Expansion Modules, Continued

Fusible Expanders

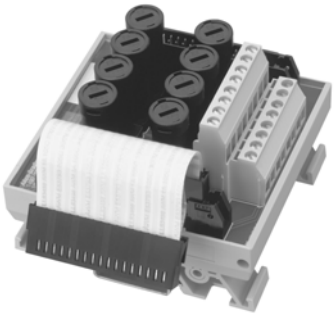

The fusible expander modules feature eight 5 x 20 mm finger-safe fuse holders, blown fuse indicators, and extra terminals for landing two wires per field-side device. They are offered with eight fuse holders for both 24V and 120V applications. An expander cable is provided for connection to the mating module. Fuses are not provided.

Feed-Through Expanders

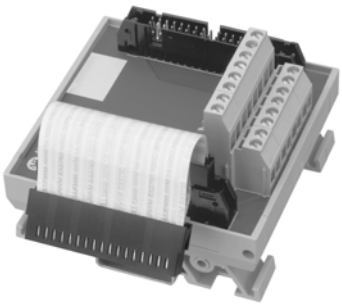

The feed-through expander modules feature eight channels with extra terminals for landing two wires per field-side device. An expander cable is provided for connection to the mating module.

Digital IFM Options and Features, Continued

Digital IFM Modules with Field Removable Terminal Blocks (RTBs)

Select groups of standard, fused and relay digital Bulletin 1492 wiring system modules (refer to Selection Tables) have field terminal blocks that can be removed (RTB). This RTB feature can provide easier wiring of field devices in a control cabinet where the IFM is located in a hard to reach area, or where hand-access is limited. It can also provide easier and faster replacement of a damaged or defective Bulletin 1492 wiring system module. The removable plug portion of the RTB assembly has a screw at each end to securely fasten it to the RTB socket, which is mechanically secured to the module circuit board hand housing. Modules are shipped with the RTB socket, but without the removable plug(s). Plugs are available with screw style (e.g., 1492-RTB20**N**)or push-in style (e.g., 1492-RTB16**P**) terminals and must be ordered separately (two pieces cat. no., refer to page 17 for details). Refer to the selection tables for the particular PLC I/O system of interest to determine which modules are offered with field removable terminal blocks.

All of the features available on fixed terminal block products (e.g. labels, agency certification, etc.) are also provided for the removable terminal block Bulletin 1492 wiring system modules.

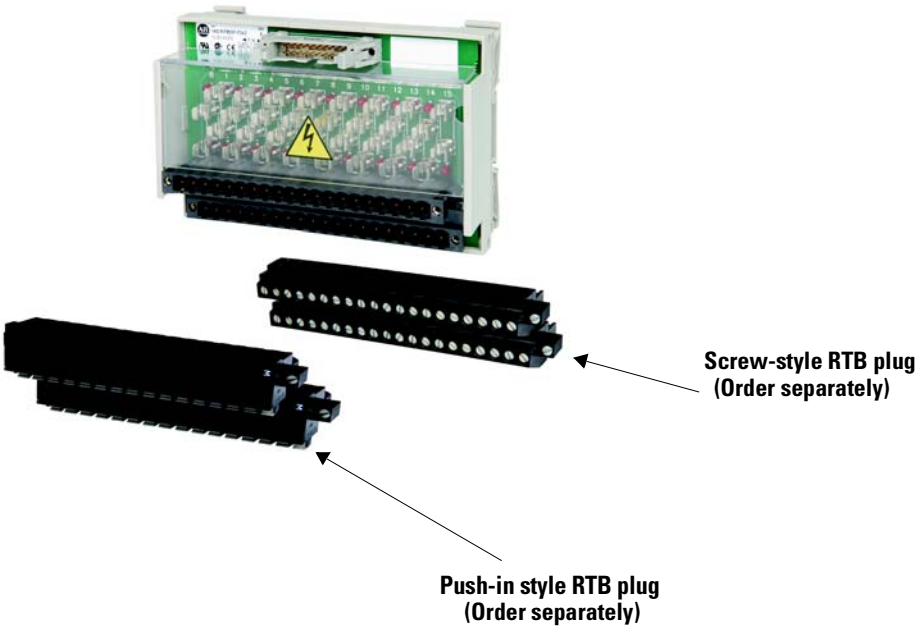

Digital IFM Options and Features, Continued

Digital Pre-Wired Cables

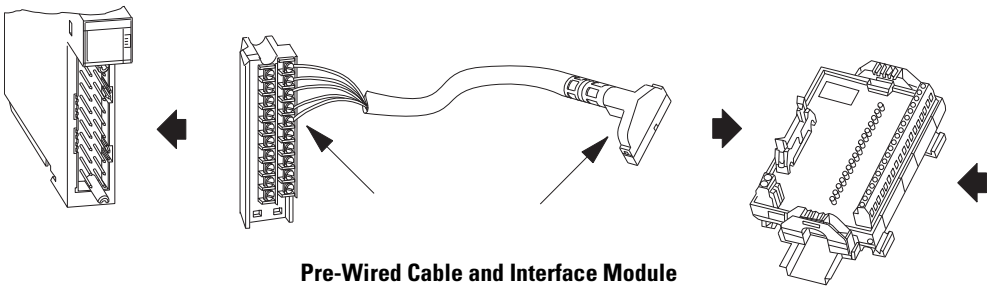

Pre-Wired Cable and Interface Module

Bulletin 1492 pre-wired cables are designed to minimize control wiring in a panel. Pre-wired cables, when used with an IFM, replace the point-to-point wiring between Allen-Bradley programmable controller I/O modules and individual terminal blocks. The pre-wired cables have a removable terminal block or wiring arm at the I/O end of the cable and a cable connector on the other end to connect to the IFM. All of the pre-wired cables use #22 AWG wire and are 100% tested for continuity to make a perfect connection every time. The digital pre-wired cables are offered in four standard lengths of 0.5, 1.0, 2.5, and 5.0 m to fit a variety of applications. Other cable lengths are also available as build-to-order products. Pre-wired cables are available for many of the Bulletin 1756 ControlLogix, 1769 Compact I/O used with CompactLogix and MicroLogix 1500, 1794 Flex, and 1771 I/O modules. Plus availability for the base I/O of the MicroLogix 1500 and 40 I/O base of the MicroLogix 1200 packaged controllers. A select group of modules are also available for the PowerFlex 700H and 700S drives.

Ready-to-Wire Digital Cables

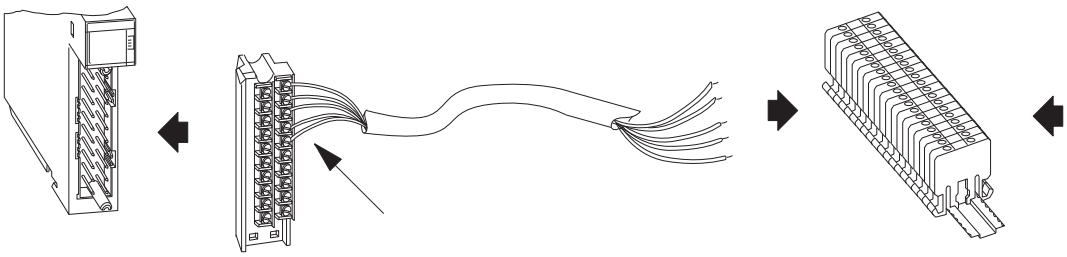

Digital I/O Module-Ready Cable and Standard Terminal Block

Digital I/O module-ready cables have an I/O removable terminal block or wiring arm pre-wired to one end to of the cable and free connectors on the other end for wiring into standard terminal blocks or other type of connectors. I/O-ready cables have individual color-coded conductors for quick wire-to-terminal coordination. Most I/O-ready cables use #18 AWG conductors for higher current applications or longer cable runs. The I/O-ready cables are offered in standard lengths of 1.0, 2.5, and 5.0 m to fit a variety of applications. Other cable lengths are also available as build-to-order products. Digital I/O

module ready cables are available for many of the Bulletin 1756 ControlLogix, 1769 Compact I/O used with CompactLogix and MicroLogix 1500, 1794 Flex, and 1771 I/O modules. Plus availability for the base I/O of the MicroLogix 1500 and 40 I/O base of the MicroLogix 1200 packaged controllers. A select group of modules are also available for the PowerFlex 700H and 700S drives.

Digital IFM Options and Features, Continued

Ready-to-Wire Digital Cables, Continued

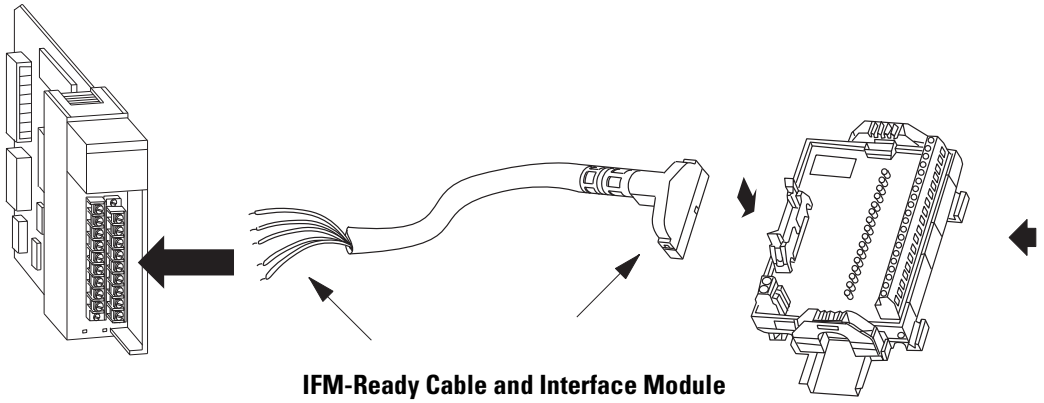

IFM-Ready Cable and Interface Module

IFM-ready cables have a cable connector that attaches to the IFM pre-wired to one end and free connectors ready to wire to I/O modules or other components on the other end. IFM-ready cables use #22 AWG wire and have individual color-coded conductors for quick wire-to-terminal coordination. The digital IFM-ready cables are offered in standard lengths of 1.0, 2.5, and 5.0 m to fit a variety of applications. Other cable lengths are also available as build-to-order products.

IFM Catalog Number Explanation for Digital I/O Modules

Important: The following IFM catalog number breakdown is for explanation purposes only. It is **not** a product configurator. Not all combinations of fields are valid product catalog numbers. First, select the desired IFM using the steps in Ordering Digital and Analog Wiring Systems on page 28. Then, use this breakdown for verification and explanation only.

1492–IFM 20 F–F120–2

Bulletin No.

Digital Interface Modules	
IFM	Fixed (non-removable) terminal block
RIFM	Removable terminal block

No. of Cable Connector Pins	
20	20 pins
40	40 pins

Status Indication	
F	No LEDs
FN	Narrow IFM
D24	24V AC/DC LEDs for input and output modules
D24N	Narrow IFM with 24V AC/DC LEDs
D24A	24V AC/DC LEDs for input modules
DS24	Isolated IFM with 24/48V AC/DC LEDs for output modules
DS24A	Isolated IFM with 24V AC/DC LEDs for input modules
D120	120V AC LEDs for input and output modules
D120N	Narrow IFM with 120V AC LEDs
D120A	120V AC LEDs for input modules
DS120	Isolated IFM with 120V AC LEDs for output modules
DS120A	Isolated IFM with 120V AC LEDs for input modules
D240	240V AC LEDs for output modules
DS240A	Isolated IFM with 240V AC LEDs for input modules
D240A	240V AC LEDs for input modules

No. of Field-Side Wiring Terminals	
Blank	One per I/O connection
2	Two per I/O connection
3	Three per I/O connection
4	Four per I/O connection

Fuses and Their Indicators	
Blank	No fuse clips
F	5 x 20 mm fuse clips
F24	5 x 20 mm fuse clips with 24V blown fuse indicators for output modules
F24A	5 x 20 mm fuse clips with 24V blown fuse indicators for input modules
F120	5 x 20 mm fuse clips with 120V blown fuse indicators for output modules
F120A	5 x 20 mm fuse clips with 120V blown fuse indicators for input modules
F240	5 x 20 mm fuse clips with 240V blown fuse indicators for output modules
F24D-2	5 x 20 mm fuse clips with 24V blown fuse low leakage indicators for the 1756-OB16D diagnostic output module
F24AD-4	5 x 20 mm fuse clips with 24V blown fuse low leakage indicators for the 1756-IB16D diagnostic input module
FS	Isolated IFM with 5 x 20 mm fuse clips
FS24	Isolated IFM with 5 x 20 mm fuse clips with 24V blown fuse indicators for output modules
FS24A	Isolated IFM with 5 x 20 mm fuse clips with 24V blown fuse indicators for input modules
FS120	Isolated IFM with 5 x 20 mm fuse clips with 120V blown fuse indicators for output modules
FS120A	Isolated IFM with 5 x 20 mm fuse clips with 120V blown fuse indication for input modules
FS240	Isolated IFM with 5 x 20 mm fuse clips with 240V blown fuse indication for output modules

Terms for Relay Master/Expander IFMs

Relay master and expander XIMs are available for Bulletin 1746, 1756, 1769, and 1771 digital output modules.

Relay Master XIM — Provides 8 or 16 relay outputs for a digital output module.

Expander XIM — In addition to the relay master XIM, an expander XIM provides eight or sixteen additional outputs. There are five types of expander XIMs: eight-channel relays, eight-channel fusing, and eight-channel feed-through XIMs.

Relay Master/Expander XIMs Catalog Number Explanation for Digital I/O Modules

Important: The following XIM catalog number breakdown is for explanation purposes only. It is **not** a product configurator. Not all combinations of fields are valid product catalog numbers First, select the desired XIM using the steps in Ordering Digital and Analog Wiring Systems on page 28. Then, use this breakdown for verification and explanation only.

1492 – XIM 20 24 – 2

Bulletin No.

Relay Master and Expander Interface Modules	
XIM	Fixed (non-removable) terminal block
RXIM	Removable terminal block

No. Relays or Extra Terminals	
2	2 terminals per point
8R	8 relays
16R	16 relays
16RF	16 fused relays

No. Cable Connector Pins	
20	20 pins **(master only)**
40	40 pins **(master only)**
Blank	Expander module

Rating of Relay Coil or Blown Fuse Indicator	
24	24V relay coil
120	120V relay coil
F	No relays or fuses
F-F24	5 x 20 mm fuse clips with 24V blown fuse indicators
F-F120	5 x 20 mm fuse clips with 120V blown fuse indicators

Removable Terminal Block (RTB) Plug Catalog Number Explanation

Important: The following RTB plug catalog number breakdown is for explanation only.

1492 – RTB 20 – N

Bulletin No.

Removable Terminal Block Plug

Number of Poles/ Terminals
8
12
14
16
17
20

Connector Style	
N	Screw Style
P	Push-in Style

IFM and XIM Cable Catalog Number Explanation for Digital I/O Modules

Important: Use the following tables as a product configurator for pre-wired, IFM-ready, and I/O module-ready cables for Bulletins **1746**, **1756**, and **1771** digital I/O module cables. All combinations of these fields make valid product catalog numbers. Refer to selection tables for IFM/XIM compatibility and ordering.

1492–CABLE 010 A

Bulletin No.

Digital Interface Cable

Standard or Build-to-Order Length Cable		
005	0.5 m (1.64 ft)	Standard Length
010	1.0 m (3.28 ft)	
025	2.5 m (8.20 ft)	
050	5.0 m (16.40 ft)	
001…020	0.1…2.0 m (0.328…6.56 ft) 0.1 m (0.328 ft) increments	Build-to-Order Length
020…100	2.0…10.0 m (6.56…32.8 ft) 0.5 m (1.64 ft) increments	
100…300	10.0…30.0 m (32.8…98.4 ft) 1.0 m (3.28 ft) increments	

Cable Type	
A, B, C, D, E, G, N, S	Pre-wired cables for 8-point isolated and 16-point digital Bulletin 1746 I/O modules ❶
CR	Pre-wired cable for Catalog Number 1746-OA16 (XIM only)
F, T	Pre-wired cable for digital Bulletin 1771 I/O modules ❷
FF	Pre-wired cable with fused wiring arm for 16-point digital Bulletin 1771 output modules ❷
H	Pre-wired cable for 32-point digital Bulletin 1746 I/O modules ❶
J, K, L, M, R	Pre-wired cables for 16-point isolated and 32-point digital Bulletin 1771 I/O modules ❷
U, V, W, X	Pre-wired cables for 8- and 16-point digital Bulletin 1756 I/O modules ❸
Y, Z	Pre-wired cables for 16-point isolated and 32-point digital Bulletin 1756 I/O modules ❸
P	Digital IFM-ready cable with 20 conductors
Q	Digital IFM-ready cable with 40 conductors
N3	Digital I/O module-ready cable with 40-point Catalog Number 1746-N3 cable connector
RTBB	Digital I/O module-ready cable with 16-point Catalog Number 1746-RT25B terminal block (blue)
RTBO	Digital I/O module-ready cable with 16-point Catalog Number 1746-RT25C terminal block (orange)
RTBR	Digital I/O module-ready cable with 16-point Catalog Number 1746-RT25R terminal block (red)
TBCH	Digital I/O module-ready cable with 36-pin Catalog Number 1756-TBCH removable terminal block
TBNH	Digital I/O module-ready cable with 20-pin Catalog Number 1756-TBNH removable terminal block
WA	Digital I/O module-ready cable with Catalog Number 1771-WA 8-point wiring arm
WD	Digital I/O module-ready cable with Catalog Number 1771-WD 6-point wiring arm
WH	Digital I/O module-ready cable with Catalog Number 1771-WH 16-point wiring arm
WHF	Digital I/O module-ready cable with Catalog Number 1771-WHF 16-point fused wiring arm
WN	Digital I/O module-ready cable with Catalog Number 1771-WN 32-point wiring arm

❶ To make sure the Bulletin 1746 SLC 500 digital I/O module is compatible with the IFM/XIM, refer to pages 29, 31, and 34.

❷ To make sure the Bulletin 1771 PLC digital I/O module is compatible with the IFM/XIM, refer to pages 59, 60, and 62.

❸ To make sure the Bulletin 1756 ControlLogix digital I/O module is compatible with the IFM/XIM, refer to pages 36, 38, and 40.

The cables used for Relay Master/Expander XIMs are the same as those used for Digital I/O Modules (page 28) with the exception of the Catalog Number 1746-OA16 output module, which uses the 1492-CABLE*CR cable.

IFM and XIM Cable Catalog Number Explanation for Digital I/O Modules, Continued

Important: Use the following tables as a product configurator for pre-wired, IFM-ready, and I/O module-ready cables for Bulletins **1769** digital I/O module cables. All combinations of these fields make valid product catalog number. Refer to selection tables for IFM/XIM compatibility and ordering.

1492 – CAB 010 A69

Bulletin No.

Digital Interface Cable

Standard or Build-to-Order Length Cable		
005	0.5 m (1.64 ft)	Standard Length
010	1.0 m (3.28 ft)	
025	2.5 m (8.20 ft)	
050	5.0 m (16.40 ft)	
001-020	0.1…2.0 m (0.328…6.56 ft) 0.1 m (0.328 ft increments)	Build-to-Order Length
020-100	2.0…10.0 m (6.56…32.8 ft) 0.5 m (1.64 ft) increments	
100-300	10.0…30.0 m (32.8…98.4 ft) 1.0 m (3.28 ft) increments	

Cable Type	
A69, B69, C69, D69, E69, F69, G69, H69, J69, K69, L69, M69	Pre-wired cables for 8, 16, and 32-point Bulletin 1769 digital I/O modules
RTN10	I/O-ready cable with Catalog Number 1769-RTBN10 terminal block
RTN18	I/O-ready cable with Catalog Number 1769-RTBN18 terminal block
RTN32I	I/O-ready cable for 1769-IQ32 module
RTN32O	I/O ready cable for 1769-OB32 module
R71	Pre-wired cables for 16-channel isolated and 32-channel digital Bulletin 1771 I/O modules ❶

❶ To make sure the Bulletin 1771 PLC analog I/O module is compatible with the IFM, see pages 59 and 60.

Cable Catalog Number Explanation for µ1200 and µ1500 Base I/O to IFM Modules

Important: Use the following tables as a product configurator for pre-wired, and I/O module-ready cables for Bulletin **1764** MicroLogix 1500 and **1762** MicroLogix 1200 40 I/O controller digital I/O cables. All combinations of these fields make valid product catalog numbers. Refer to selection tables for IFM compatibility and ordering.

1492 – CAB 010 A6x

Bulletin No.

Digital Interface Cable

Standard or Build-to-Order Length Cable		
005	0.5 m (1.64 ft)	Standard Length
010	1.0 m (3.28 ft)	
025	2.5 m (8.20 ft)	
050	5.0 m (16.40 ft)	
001…020	0.1…2.0 m (0.328…6.56 ft) 0.1 m (0.328 ft) increments	Build-to-Order Length
020…100	2.0…10.0 m (6.56…32.8 ft) 0.5 m (1.64 ft) increments	
100…300	10.0…30.0 m (32.8…98.4 ft) 1.0 m (3.28 ft) increments	

Cable Type for Bul. 1492-CAB010A62	
A62, B62	Pre-wired cables for Bulletin 1762 40 I/O controllers
X62	I/O-ready cable for 1762-L40AWA, -L40BXB, and -L40BWA inputs
T62	I/O-ready cable for 1762-L40AWA, -L40BXB and -L40BWA outputs

Cable Type for Bul. 1492-CAB010A64	
A64, B64, C64, F64	Pre-wired cables for Bulletin 1764 I/O base units
W64	I/O-ready cable for 1764-24AWA, -24BWA base unit inputs
X64	I/O-ready cable 1764-28BXB base unit inputs
T64	I/O-ready cable for1764-24AWA, -24BWA base unit outputs
U64	I/O-ready cable for 1764-28BXB base unit outputs

Cable Catalog Number Explanation for 1794 Flex I/O to IFM Modules

Important: Use the following tables as a product configurator for pre-wired, and I/O module-ready cables for Bulletin **1794 Flex I/O, Cat. Nos. 1794-TB37DS, and 1794-TB62DS base units**. All combinations of these fields make valid product catalog number. Refer to selection tables for IFM compatibility and ordering.

1492 – CAB 010 A94

Bulletin No.

Digital Interface Cable

Standard or Build-to-Order Length Cable		
005	0.5 m (1.64 ft)	Standard Length
010	1.0 m (3.28 ft)	
025	2.5 m (8.20 ft)	
050	5.0 m (16.40 ft)	
001-020	0.1…2.0 m (0.328…6.56 ft) 0.1 m (0.328 ft increments)	Build-to-Order Length
020-100	2.0…10.0 m (6.56…32.8 ft) 0.5 m (1.64 ft) increments	
100-300	10.0…30.0 m (32.8…98.4 ft) 1.0 m (3.28 ft) increments	

Cable Type	
A94	Pre-wired cables for Bulletin 1794 Flex digital I/O using the Bulletin 1794-TB37DS base
B94	Pre-wired cables for Bulletin 1794 Flex digital I/O using the Bulletin 1794-TB62DS base
G94	Digital I/O ready cable for digital I/O using the Bulletin 1794 TB37DS base
H94	Digital I/O ready cable for digital I/O using the Bulletin 1794 TB62DS base

Analog IFM Options and Features

Analog IFMs (AIFMs), similar to groups of terminal blocks, are available with either 15- or 25-pin D-shell connectors. The number of field-side wiring terminals varies with the type of module — from three to five terminals per analog I/O channel. AIFMs are available as feed-through or fusible to customize the wiring system to your application.

All of the AIFMs have the following features:

cULus: Hazardous Locations: Class I Div 2; Groups A, B, D, and D.
Temperature Code: T3C @ 60 °C.
UL File No. E10314, Guide No. NRAG
Factory Mutual (FM): Hazardous Locations; Class I Div 2: Groups A, B, C, and D.
Temperature Rating: T3C @ 60 °C. FM file J.I.3000590
CE Compliant for all applicable directives

Refer to Specifications, page 191.

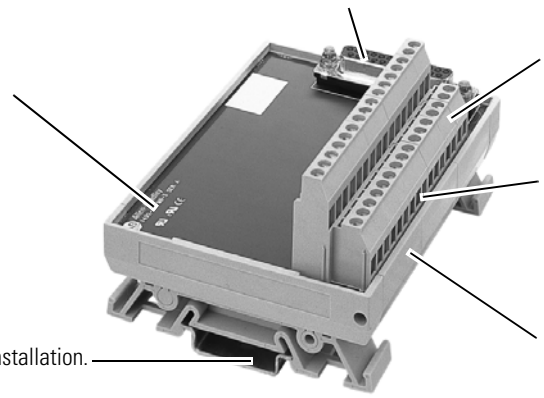

Analog IFM

Analog Feed-Through Modules

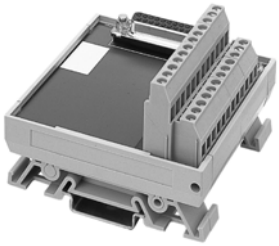

Feed-through AIFMs have three terminals per analog I/O channel to wire the analog I/O device connections and shield. The shield terminals are internally bussed together and also tied to the D-shell housing to connect with the Bulletin 1492 cable shield and back to the PLC module. Some feed-through AIFMs also have special features (refer to page 26).

The **Catalog Number 1492-AIFM4-3** AIFM, when used with Catalog Numbers 1771-OFE2 and -OFE3 analog input modules, provides selectable current limiting resistors. Simply flip a DIP switch to add the 250 Ω series impedance into the output circuit. As a troubleshooting aid, test point loops access the circuit on either side of the series resistor and can be used to

measure output circuit voltage/current. The limiting resistors are configured on a per channel basis.

The **Catalog Number 1492-AIFM6TC-3** AIFM for the Cat. Nos. 1756-IT6I and 1756-IT6I2 controllers provide on- or off-board cold junction compensation to allow thermocouples to be connected "remotely" while still correcting for temperature at the termination point. The combination thermistor and isothermal bar acquires temperature data at the AIFM for the Bul. 1756 thermocouple module to adjust the input value.

The **Catalog Number 1492-AIFM8-3** AIFM has eight extra terminals commoned together in a power bus that can be used for Module Common connections or power supply connections. The extra terminals and internal jumpering eliminate the need for some terminal blocks for power connections and jumper accessories.

Below are examples of the field-side connections available on the feed-through AIFMs.

4-Wire Transmitter Input

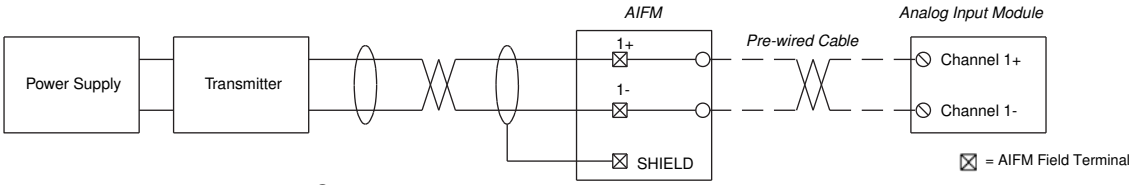

Output

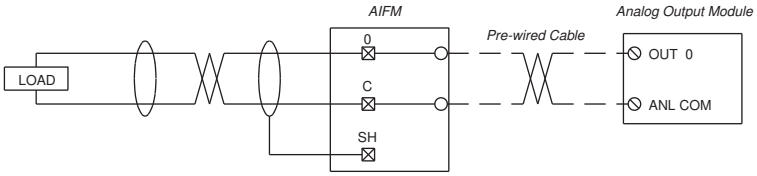

Analog Fusible Modules

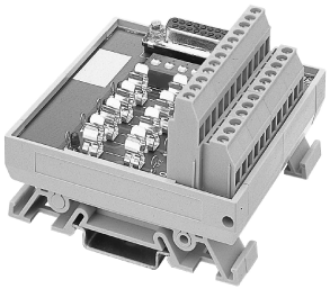

Fusible AIFMs are available for analog input modules. These AIFMs enable you to fuse the **input device power source** on the field-side. The field-side power source is distributed through individual on-board 5 x 20 mm fuse clips. The fused AIFMs have 24V DC blown fuse indicators to reduce the troubleshooting time needed to locate and replace a blown fuse. The fuse holder has an integrated fuse puller to simplify fuse removal. Isolation switch

plugs or "dummy fuses" (refer to Accessories, page 184) are also available to isolate an input circuit after power is removed. In addition, once the circuit has been isolated and power restored, the input loop current can be measured in 2-wire transmitter applications.

The fusible AIFMs have five terminals per input channel (except Catalog Number AIFM16-F-3, which has three terminals per channel) to wire the input-device connections, device shield, and power connections for 2-, 3-, and 4-wire transmitters. The shield terminals are internally bussed together and also tied to the D-shell housing to connect with the Bulletin 1492 cable shield and back to the PLC module. There are two separate power busses (4…16 terminals, depending on the AIFM) that can be used for +V and DC COM connections and/or device Common. The extra terminals and internal connections eliminate additional terminal blocks and jumpers — reducing spare parts inventory, saving panel space, and simplifying installation.

Several of the fusible AIFMs have on-board DIP switches to easily connect unused inputs to module common — reducing wiring on the field-side. You no longer need extra jumper wires or comb-style jumpers to properly terminate unused inputs, as recommended on many Bulletin 1746, 1756, and 1771 analog input modules. Inputs are jumpered via DIP switch on a per-channel basis.

The **Catalog Numbers 1492-AIFM4I-F-5** and **1492-AIFM4C-F-5** AIFMs both have test point loops on either side of the fuse clips for easier access and connection of metering equipment. Metering equipment can also be attached to the fuse clips on other AIFMs for measuring input loop current.

Below are several examples of the field-side connections for 2- and 4-wire transmitters available on the fusible AIFMs.

2-Wire Analog Input Transmitter

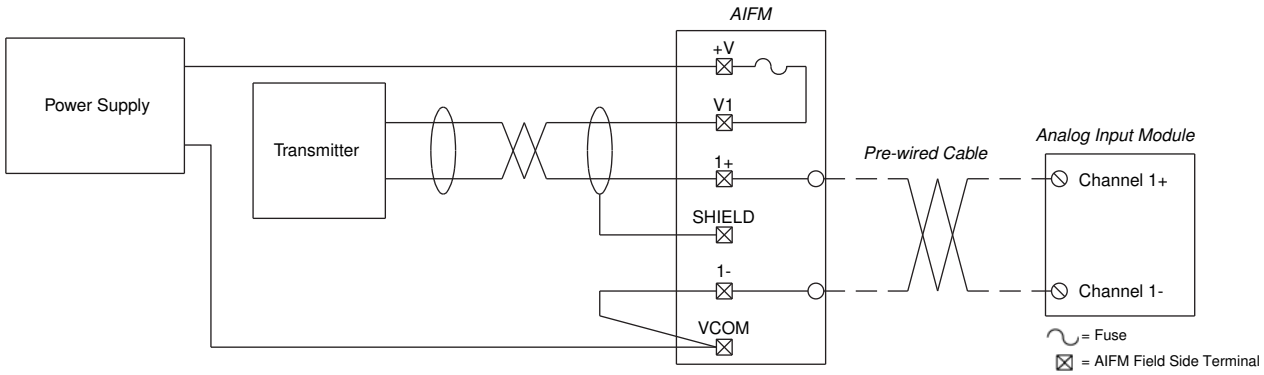

4-Wire Analog Input Transmitter

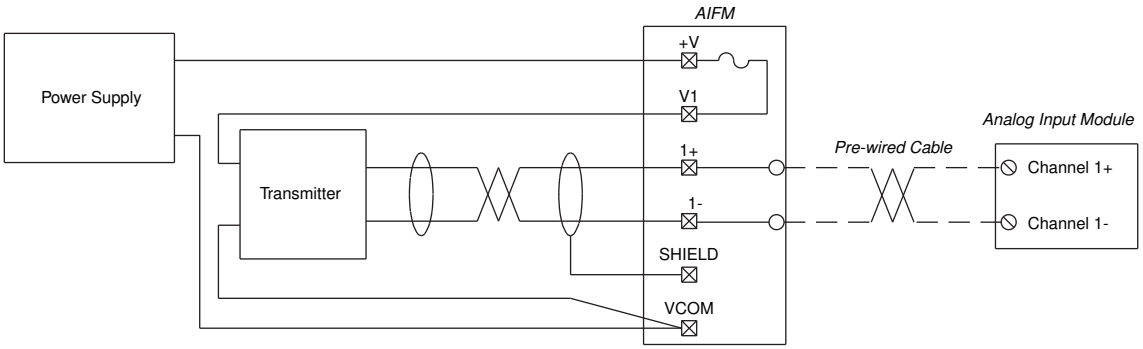

Note: Bulletin 1492 module wiring diagrams are available at www.ab.com. Refer to page 186.

Analog AIFM Modules with Field Removable Terminal Blocks (RTBs)

Select groups of analog Bulletin 1492 wiring system modules (refer to Selection Tables) have field terminal blocks that can be removed (RTB). This RTB feature can provide easier wiring of field devices in a control cabinet where the IFM is located in a hard to reach area, or where hand-access is limited. It can also provide easier and faster replacement of a damaged or defective Bulletin 1492 wiring system module. The removable plug portion of the RTB assembly has a screw at each end to securely fasten it to the RTB socket, which is mechanically secured to the module circuit board and housing. Modules hare shipped with the RTB socket, but without the removable plug(s). Plugs are available with screw style or push-in style terminals and must be ordered separately. Refer to the Selection Tables for the particular PLC I/O system of interest to determine which modules are offered with field Removable Terminals Blocks.

All of the features available on analog fixed terminal block products (e.g. labels, agency certification, etc.) are also provided for the removable terminal block Bulletin 1492 wiring system modules.

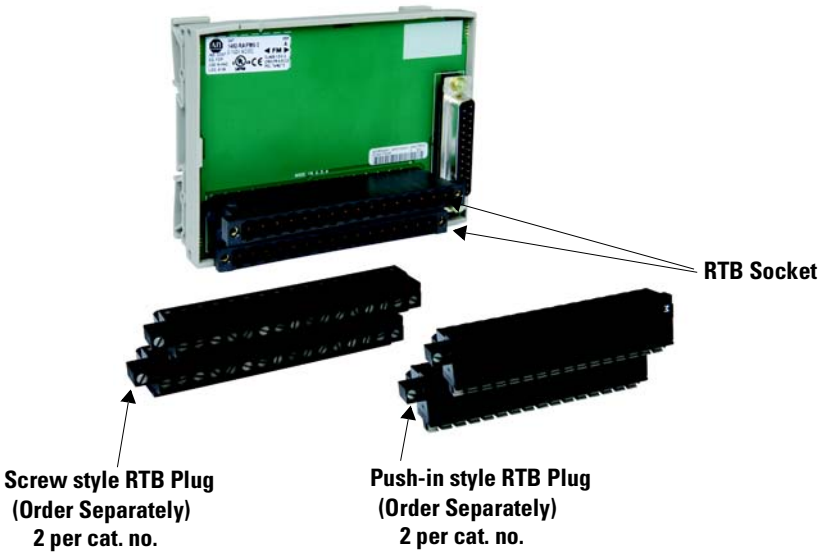
RTB Socket
Screw style RTB Plug
(Order Separately)
2 per cat. no.
Push-in style RTB Plug
(Order Separately)
2 per cat. no.

AIFM Catalog Number Explanation for Analog I/O Modules

Important: The following AIFM catalog number breakdown is for explanation purposes only. It is **not** a product configurator. Not all combinations of fields are valid product catalog numbers First, select the desired AIFM using the steps in Ordering Digital and Analog Wiring Systems on page 28. Then, use this breakdown for verification and explanation only.

1492–AIFM 16–F–5

Bulletin No.

Analog Interface Modules	
AIFM	Fixed (non-removable) terminal block
RAIMF	Removable terminal block

No. Field-Side Wiring Terminals	
3	3 per I/O channel
5	5 per input channel

Input Fuse Clips and Blown Fuse Indicators	
Blank	No fuse clips
F	5 x 20 mm fuse clips with 24V DC blown fuse indicators for output modules

No. Analog I/O Channels	
4	4 channels: input, output, or 2 input/output combination
4C	4 channels: 2 input/2 output combination
4I	4 input channels
6S	6 isolated input or output channels
6TC	6 thermocouple input channels
8	8 input or output channels
16	16 input channels
PI	8 input/2 output channels
CE4	2-channel counter input/4 outputs

Pre-Wired Cable Catalog Number Explanation for Bulletins 1746, 1756, and 1771 Analog I/O Modules

Important: The following analog cable catalog number breakdown is for explanation purposes only. It is **not** a product configurator. All combinations of fields are not valid product catalog numbers. First, select the desired AIFM using the steps in Ordering Digital and Analog Wiring Systems on page 28. Then, use this breakdown for verification and explanation only.

1492 – ACABLE 050 A

Bulletin No.

Analog Interface Cables

Standard or Build-to-Order Length Cable		
005	0.5 m (1.64 ft)	Standard Length
010	1.0 m (3.28 ft)	
025	2.5 m (8.20 ft)	
050	5.0 m (16.40 ft)	
001-020	0.1…2.0 m (0.328…6.56 ft) 0.1 m (0.328 ft increments)	Build-to-Order Length
020-100	2.0…10.0 m (6.56…32.8 ft) 0.5 m (1.64 ft) increments	
100-300	10.0…30.0 m (32.8…98.4 ft) 1.0 m (3.28 ft) increments	

A-Cable Type	
A, B, C, D, K, L, P, Q, R	Pre-wired cables for Bulletin 1746 analog I/O and RTD input modules.
E, F, G, H, J	Pre-wired cables for Bulletin 1771 analog I/O and RTD input modules.
TA, TB, TC, TD, UA, UB, UC, UD, VA, VB, WA, WB, X, Y, Z, ZA, ZB, ZC	Pre-wired cables for Bulletin 1756 analog I/O, RTD, and -IT6I thermocouple input modules.
YT	Pre-wired cable for bulletin 1756-IT6I2 thermocouple input Module.
M	Pre-wired cables for Bulletin 1757 pulse input module.

Pre-Wired Cable Catalog Number Explanation for Bulletin 1746, 1769, 1794, and PowerFlex Analog I/O Modules

Important: The following analog cable catalog number breakdown is for explanation purposes only. It is **not** a product configurator. All combinations of fields are not valid product catalog numbers. First, select the desired AIFM using the steps in Ordering Digital and Analog Wiring Systems on page 28. Then, use this breakdown for verification and explanation only.

1492 – ACAB 005 A46

Bulletin No.

Analog Interface Cables

Standard or Build-to-Order Length Cable		
005	0.5 m (1.64 ft)	Standard Length
010	1.0 m (3.28 ft)	
025	2.5 m (8.20 ft)	
050	5.0 m (16.40 ft)	
001-020	0.1…2.0 m (0.328…6.56 ft) 0.1 m (0.328 ft increments)	Build-to-Order Length
020-100	2.0…10.0 m (6.56…32.8 ft) 0.5 m (1.64 ft) increments	
100-300	10.0…30.0 m (30.0…98.4 ft) 1.0 m (3.28 ft) increments	

Cable Type	
A46	Pre-wired cables for Bulletin 1746-NI16I and -NI16V analog modules.
AA69, AB69, BA69, BB69, BC69, BD69, CA69, CB69, CC69, EA69, EB69, EC69, ED69, C69, D69, HA69	Pre-wired cables for Bulletin 1769 analog I/O modules and RTD input module.
Z7H	Pre-wired cable for PowerFlex 700H
X7S, Z7S	Pre-wired cables for PowerFlex 700S
Z94	Pre-wired cables for Bulletin 1794 analog I/O modules

Ordering Digital and Analog Wiring Systems

To order the proper IFM/XIM/AIFM pre-wired cable:

1. Determine the PLC or PowerFlex I/O platform (e.g., Bulletin 1746, 1756, 1769, 1771, 1794, 700H,700S) you are using and the catalog number of the I/O module being specified (e.g., 1746-IB16).
2. Determine whether you require field-side LEDs, fusing for over-current protection, or relays (check voltage ratings for LEDs, fuse blown indication, relay, and coil voltage).
3. Determine your field-side wiring requirements. Are extra terminals needed?
4. Determine your desired PLC I/O module to IFM/XIM/AIFM cable length (0.5 m, 1.0 m, 2.5 m, 5.0 m, or build-to-order) based on wiring needs.
5. Refer to selection tables as follows:

Selection Table Quick Reference

Platform	Page No.
Bulletin 1746 Digital (IFM/XIM)	29
Bulletin 1746 Analog (AIFM)	35
Bulletin 1756 Digital (IFM/XIM)	36
Bulletin 1756 Analog (AIFM)	41
Bulletin 1762/1764	43
Bulletin 1769 Digital (IFM/XIM)	45
Bulletin 1769 Analog (AIFM)	52
Bulletin 1794 (IFM/XIM)	53
Bulletin 1794 (AIFM)	58
Bulletin 1771 Digital (IFM/XIM)	59
Bulletin 1771 Analog (AIFM)	63
Bulletin 700 PowerFlex	66

Ordering Digital IFM-Ready Cables for IFMs/XIMs

(Refer to page 14 for definition of IFM-ready)

For pinout and wiring information, refer to IFM-Ready Cable Specifications on page 138 and the selection table on page 65.

Ordering Digital I/O Module-Ready Cables

(Refer to page 13 for the definition of I/O module-ready cables) To order the proper digital I/O module-ready cable, the following information is required:

- Type of connector needed for the I/O module(s) (catalog number of the wiring arm or removable terminal block).
- Code for the desired cable length:
  - **010** = 1.0 m
  - **025** = 2.5 m
  - **050** = 5.0 m
  - Build-to-order length

Selection Tables

Using Bulletin 1746 Selection Tables to Make Valid Bulletin 1492 Wiring System Module Catalog Numbers

Follow these steps when using the selection tables to make valid catalog numbers:

1. Find the appropriate table based on the catalog numbers of the 1746 I/O module.
2. Find the column for the 1746 I/O module.
3. Follow the column down to determine which Wiring Systems Modules are compatible with the I/O module as indicated by letter code. If there is no letter code, the Bulletin 1492 Wiring System Module is not compatible with the I/O module. NOTE: The letter codes designate the compatible Bulletin 1492 cable for that 1746 I/O and Bulletin 1492 Wiring System Module combination.
4. Select the desired Bulletin 1492 Wiring System Module.
5. Configure the cable catalog number using 1492-CABLE❶ (for digital cables) or 1492-ACABLE❶ (for analog cables). See footnote ❶ on pages 34 and 35.

Bulletin 1746 SLC 500 IFMs and Cables

Bulletin 1746 Digital 16-Point and 8-Point Isolated I/O Modules ❷

Description of 20-PIN IFM	Cat. No. for Wiring System Module with Fixed Terminal Block	Cat. No. for Wiring System Module with Removable Terminal Block Socket Assembly (order plugs separately)	I/O Module Catalog Number 1746-…																							
			IA16	IB16	IC16	IG16	IH16	IM16	IN16	ITB16	ITV16	IV16	OA16	OB16	OB16E	OBP16	OG16	OV16	OVP16	OW16	OX8	sc-IA8I❹	sc-IB8I❹	scIC8I❹	scOAP8I❹
Feed-through																										
Standard 264V AC/DC Max.	1492-IFM20F	1492-RIFM20F❼	A	B	B	E	B	A	B	B	B	B	C	E	E	E	E	E	E	D	D	A	B	B	A
Narrow standard 132V AC/DC Max.	1492-IFM20FN	1492-RIFM20FN❽	A	B	B	E	B	—	B	B	B	B	G	E	E	E	E	E	E	N	N	A	B	B	A
Extra terminals (2 per I/O) 264V AC/DC Max.	1492-IFM20F-2	1492-RIFM20F-2❼	A	B	B	E	B	A	B	B	B	B	C	E	E	E	E	E	E	D	—	—	—	—	—
3-wire sensor type input devices 132V AC/DC Max.	1492-IFM20F-3	—	A	B	B	E	B	—	B	B	B	B	—	—	—	—	—	—	—	—	—	—	—	—	—
LED Indicating																										
Standard with 24V AC/DC LEDs	1492-IFM20D24	—	—	B	—	—	—	—	B	B	B	B	—	E	E	E	—	E	E	D	—	—	—	—	—
Narrow standard with 24V AC/DC LEDs	1492-IFM20D24N	—	—	B	—	—	—	—	B	B	B	B	—	E	E	E	—	—	—	N	—	—	—	—	—

Note: Footnotes are on page 31.

Bulletin 1746 Digital 16-Point and 8-Point Isolated I/O Modules (Continued)❷

Description of 20-PIN IFM	Cat. No. for Wiring System Module with Fixed Terminal Block	Cat. No. for Wiring System Module with Removable Terminal Block Socket Assembly (order plugs separately)	I/O Module Catalog Number 1746-…																						
			IA16	IB16	IC16	IG16	IH16	IM16	IN16	ITB16	ITV16	IV16	OA16	OB16	OB16E	OBP16	OG16	OV16	OVP16	OW16	OX8	sc-IA8I❺	sc-IB8I❺	scIC8I❺	scOAP8I❺
Standard with 120V AC/DC LEDs	1492-IFM20D120 ❹	—	A	—	—	—	B	—	—	—	—	—	C	—	—	—	—	—	—	D	—	—	—	—	—
Narrow standard with 120V AC LEDs	1492-IFM20D120N	—	A	—	—	—	—	—	—	—	—	—	G	—	—	—	—	—	—	N	—	—	—	—	—
24V AC/DC LEDs and extra terminals for outputs	1492-IFM20D24-2	—	—	—	—	—	—	—	—	—	—	—	—	E	E	E	—	E	E	D	—	—	—	—	—
24V AC/DC LEDs and extra terminals for inputs	1492-IFM20D24A-2	—	—	B	—	—	—	—	B	B	B	B	—	—	—	—	—	—	—	—	—	—	—	—	—
120V AC LEDs and extra terminals for outputs	1492-IFM20D120-2	—	—	—	—	—	—	—	—	—	—	—	C	—	—	—	—	—	—	D	—	—	—	—	—
120V AC LEDs and extra terminals for inputs	1492-IFM20D120A-2	—	A	—	—	—	—	—	—	—	—	—	—	—	—	—	—	—	—		—	—	—	—	—
3-wire sensor with 24V AC/DC LEDs	1492-IFM20D24-3	—	—	B	—	—	—	—	B	B	B	B	—	—	—	—	—	—	—		—	—	—	—	—
8 Individually isolated with 24/48V AC/DC LEDs and 4 terminals/output	1492-IFM20DS24-4	—	—	—	—	—	—	—	—	—	—	—	—	—	—	—	—	—	—	—	S	—	—	—	—
8 Individually isolated with 120V AC LEDs and 4 terminals/output	1492-IFM20DS120-4	—	—	—	—	—	—	—	—	—	—	—	—	—	—	—	—	—	—	—	S	—	—	—	—
240V AC LEDs and extra terminals for outputs	1492-IFM20D240-2	—	—	—	—	—	—	—	—	—	—	—	C	—	—	—	—	—	—	D	—	—	—	—	—
240V AC LEDs and extra terminals for inputs	1492-IFM20D240A-2	—	—	—	—	—	—	A	—	—	—	—	—	—	—	—	—	—	—	—	—	—	—	—	—
Fusible																									
120V AC/DC with Extra terminals for outputs	1492-IFM20F-F-2	1492-RIFM20F-F-2❼	—	—	—	—	—	—	—	—	—	—	C	E	E	E	—	E	E	D	—	—	—	—	—
Extra terminals with 24V AC/DC blown fuse LED indicators	1492-IFM20F-F24-2	1492-RIFM20F-F24-2❼	—	—	—	—	—	—	—	—	—	—	—	E	E	E	—	E	E	D	—	—	—	—	—
Extra terminals with 120V AC/DC blown fuse LED indicators	1492-IFM20F-F120-2	1492-RIFM20F-F120-2❼	—	—	—	—	—	—	—	—	—	—	C	—	—	—	—	—	—	D	—	—	—	—	—
Extra terminals with 240V AC/DC blown fuse LED indicators	1492-IFM20F-F240-2	—	—	—	—	—	—	—	—	—	—	—	C	—	—	—	—	—	—	D	—	—	—	—	—
Extra terminals with 24V AC/DC blown fuse LED indicators for inputs	1492-IFM20F-F24A-2	1492-RIFM20F-F24A-2❼	—	B	—	—	—	—	B	B	—	—	—	—	—	—	—	E	E	—	—	—	—	—	—
Extra terminals with 120V AC/DC blown fuse LED indicators for inputs	1492-IFM20F-F120A-2	1492-RIFM20F-F120A-2❼	A	—	—	—	B	—	—	—	—	—	—	—	—	—	—	—	—	—	—	—	—	—	—
8 Individually isolated 120V AC/DC with extra terminals for outputs	1492-IFM20F-FS-2	—	—	—	—	—	—	—	—	—	—	—	—	—	—	—	—	—	—	—	S	—	—	—	—
8 Individually isolated with extra terminals output, and 24V AC/DC blown fuse indicators	1492-IFM20F-FS24-2	—	—	—	—	—	—	—	—	—	—	—	—	—	—	—	—	—	—	—	S	—	—	—	—
Two 4-point isolated groups with four terminals/input and 24V AC/DC blown fuse LED indicators	1492-IFM20F-FS24A-4	—	—	—	—	—	—	—	—	—	—	—	—	—	—	—	—	—	—	—	—	—	—	—	—
8 Individually isolated with extra terminals output, and 120V AC/DC blown fuse LED indicators	1492-IFM20F-FS120-2	—	—	—	—	—	—	—	—	—	—	—	—	—	—	—	—	—	—	—	S	—	—	—	A
8 Individually isolated with four terminals/output and 120V AC/DC blown fuse LED indicators	1492-IFM20F-FS120-4	—	—	—	—	—	—	—	—	—	—	—	—	—	—	—	—	—	—	—	S	—	—	—	—
Two 4-point isolated groups with four terminals/input and 120V AC/DC blown fuse indicators	1492-IFM20F-FS120A-4	—	—	—	—	—	—	—	—	—	—	—	—	—	—	—	—	—	—	—	—	—	—	—	—
8 Individually isolated with four terminals/output and 240V AC/DC blown fuse LED indicators	1492-IFM20F-FS240-4	—	—	—	—	—	—	—	—	—	—	—	—	—	—	—	—	—	—	—	S	—	—	—	A

Note: Footnotes are on page 31.

Bulletin 1746 Digital 16-Point and 8-Point Isolated I/O Modules (Continued)❷

Description of 20-PIN IFM	Cat. No. for Wiring System Module with Fixed Terminal Block	Cat. No. for Wiring System Module with Removable Terminal Block Socket Assembly (order plugs separately)	I/O Module Catalog Number 1746-…																						
			IA16	IB16	IC16	IG16	IH16	IM16	IN16	ITB16	ITV16	IV16	OA16	OB16	OB16E	OBP16	OG16	OV16	OVP16	OW16	OX8	sc-IA8I❹	sc-IB8I❹	scIC8I❹	scOAP8I❹
Relay Master (LED Indicating)❺❻																									
20-pin master with eight (8) 24V DC relays	1492-XIM2024-8R❾	—	—	—	—	—	—	—	—	—	—	—	—	E	E	E	—	—	—	—	—	—	—	—	—
20-pin master with eight (8) 120V AC relays	1492-XIM20120-8R❿	—	—	—	—	—	—	—	—	—	—	—	CR	—	—	—	—	—	—	—	—	—	—	—	—
20-pin master with sixteen (16) 24V DC relays	1492-XIM2024-16R	—	—	—	—	—	—	—	—	—	—	—	—	E	E	E	—	—	—	—	—	—	—	—	—
20-pin master with sixteen (16) 24V DC relays with fusing	1492-XIM2024-16RF	—	—	—	—	—	—	—	—	—	—	—	—	E	E	E	—	—	—	—	—	—	—	—	—
20-pin master with sixteen (16) 120V AC relays	1492-XIM20120-16R	—	—	—	—	—	—	—	—	—	—	—	CR	—	—	—	—	—	—	—	—	—	—	—	—
20-pin master with sixteen (16) 120V AC relays with fusing	1492-XIM20120-16RF	—	—	—	—	—	—	—	—	—	—	—	CR	—	—	—	—	—	—	—	—	—	—	—	—
Relay Expander (LED Indicating) ❺❻																									
Expander with eight (8) 24V DC relays	1492-XIM24-8R	1492-RXIM24-8R*	—	—	—	—	—	—	—	—	—	—	—	❶	❶	❶	—	—	—	—	—	—	—	—	—
Expander with eight (8)120V AC relays	1492-XIM120-8R	—	—	—	—	—	—	—	—	—	—	—	❶	—	—	—	—	—	—	—	—	—	—	—	—
Fusible Expander																									
8-ch. expander with 24V DC blown fuse indicators	1492-XIMF-F24-2	—	—	—	—	—	—	—	—	—	—	—	—	❶	❶	❶	—	—	—	—	—	—	—	—	—
8-ch. expander with 120V AC blown fuse indicators	1492-XIMF-F120-2	—	—	—	—	—	—	—	—	—	—	—	❶	—	—	—	—	—	—	—	—	—	—	—	—
Feed-through Expander																									
Expander with eight feed-through channels	1492-XIMF-2	—	—	—	—	—	—	—	—	—	—	—	❶	❶	❶	❶	—	—	—	—	—	—	—	—	A

❶ Can have up to 1 expandable module depending upon master used (total 16 pts or less), extender cable is provided.
❷ Cables are available in standard lengths of 0.5 m 1.0 m, 2.5 m, and 5.0 m. To order, insert the code for the desired cable length into the catalog number 005 = 0.5 m (010 = 1.0 m, 025 = 2.5 m, and 050 = 5.0 m), and insert the letter in the box. Example: **Catalog Number 1492-CABLE050A** is for a 5.0 m cable, and the letter A.
❸ For information concerning this I/O module, contact Spectrum Controls (Phone: 425-641-9473) or at www.spectrumcontrols.com.
❹ This IFM is not recommended for use with PLC I/O modules that have an off-state leakage current exceeding 0.5 mA. Use a 1492-IFM20D120N or 1492-IFM20D120A-2 for inputs. Use 1492-IFM20D120-2 for outputs.
❺ The voltage rating is relay control/coil voltage. For relay contact ratings, refer to page 192.
❻ The LED indicates the PLC output status.
❼ Compatible Removable Terminal Block (RTB) plug; 1492-RTB20N (screw style terminals) or 1492-RTB20P (push-in style terminals). ORDER PLUGS SEPARATELY.
❽ Compatible Removable Terminal Block (RTB) plug; 1492-RTB10N (screw style terminals) or 1492-RTB10P (push-in style terminals). ORDER PLUGS SEPARATELY.
❾ Expandable to 16 using XIM24-8R or XIMF-24-2.
❿ Expandable to 16 using XIM120-8R or XIMF-24-2.
✱ Compatible Removable Terminal Block (RTB) plug; 1492-RTB12N (screw style terminals) or 1492-RTB12P (push-in style terminals). ORDER PLUGS SEPARATELY.

Bulletin 1746 SLC 500 IFMs and Cables, Continued

Bulletin 1746 Digital 32-Point I/O Modules ❷

Description of 40-PIN IFM	Cat. No. for Wiring System Module with Fixed Terminal Block	Cat. No. for Wiring System Module with Removable Terminal Block Socket Assembly (order plugs separately	I/O Module Catalog Number 1746-…				
			IB32	IV32	OB32	OB32E	OV32
Feed-through							
Standard 132V AC/DC Max.	1492-IFM40F	1492-RIFM40F❻	H	H	H	H	H
Extra terminals132V AC/DC Max.	1492-IFM40F-2	1492-RIFM40F-2❻	H	H	H	H	H
3-wire sensor type input devices 60V AC/DC Max.	1492-IFM40F-3	—	H	H	—	—	—
LED Indicating							
Standard with 24V AC/DC LEDs	1492-IFM40D24	1490-RIFM40D24❻	H	H	H	H	H
24V AC/DC LEDs and extra terminals for outputs	1492-IFM40D24-2	—	—	—	H	H	H
24V AC/DC LEDs and extra terminals for inputs	1492-IFM40D24A-2	1492-RIFM40D24A-2❻	H	H	—	—	—

Note: Footnotes are on the following page.

Bulletin 1746 Digital 32-Point I/O Modules (Continued)❷

Description of 40-PIN IFM	Cat. No. for Wiring System Module with Fixed Terminal Block	Cat. No. for Wiring System Module with Removable Terminal Block Socket Assembly (order plugs separately	I/O Module Catalog Number 1746-…				
			IB32	IV32	OB32	OB32E	OV32
120V AC LEDs and extra terminals for outputs	1492-IFM40D120-2	—	—	—	—	—	—
120V AC LEDs and extra terminals for inputs	1492-IFM40D120A-2	—	—	—	—	—	—
3-wire sensor with 24V AC/DC LEDs	1492-IFM40D24-3	—	H	H	—	—	—
16 Individually isolated with 24/48V AC/DC LEDs and four terminals/output	1492-IFM40DS24-4	—	—	—	—	—	—
16 Individually isolated with 24V AC/DC LEDs and four terminals/input	1492-IFM40DS24A-4	—	—	—	—	—	—
16 Individually isolated with 120V AC LEDs and four terminals/output	1492-IFM40DS120-4	—	—	—	—	—	—
16 Individually isolated with 120V AC LEDs and four terminals/input	1492-IFM40DS120A-4	—	—	—	—	—	—
16 Individually isolated with 240V AC LEDs and four terminals/input	1492-IFM40DS240A-4	—	—	—	—	—	—
Fusible							
120V AC/DC with extra terminals for outputs	1492-IFM40F-F-2	—	—	—	H	H	H
Extra terminals with 24V AC/DC blown fuse LED indicators for outputs	1492-IFM40F-F24-2	1492-RIFM40F-F24-2❻	—	—	H	H	H
Extra terminals with 120V AC/DC blown fuse LED indicators for outputs	1492-IFM40F-F120-2	—	—	—	—	—	—
16 Individually isolated with extra terminals for 120V AC/DC outputs	1492-IFM40F-FS-2	—	—	—	—	—	—
16 Individually isolated with extra terminals and 24V AC/DC blown fuse indicators	1492-IFM40F-FS24-2	—	—	—	—	—	—
16 Individually isolated with 24V AC/DC blown fuse indicators and four terminals/output	1492-IFM40F-FS24-4	—	—	—	—	—	—
16 Individually isolated 240V AC/DC with 4 terminals/output	1492-IFM40F-FS-4	—	—	—	—	—	—
16 Individually isolated with extra terminals and 120V AC/DC blown fuse LED indicators	1492-IFM40F-FS120-2	1492-RIFM40F-FS120-2❻	—	—	—	—	—
16 Individually isolated with 120V AC/DC blown fuse LED indicators and four terminals/output	1492-IFM40F-FS120-4	1492-RIFM40F-FS120-4❼	—	—	—	—	—
16 Individually isolated with 240V AC/DC blown fuse LED indicators and four terminals/output	1492-IFM40F-FS240-4	—	—	—	—	—	—
16 Individually isolated with 24V AC/DC blown fuse LED indicators and four terminals/input	1492-IFM40F-FS24A-4	—	—	—	—	—	—
16 Individually isolated 120V AC/DC with 4 terminals/input	1492-IFM40F-FSA-4	—	—	—	—	—	—
16 Individually isolated with 120V AC/DC blown fuse LED indicators and four terminals/input	1492-IFM40F-FS120A-4	1492-RIFM40F-FS120A-4❼	—	—	—	—	—
16 Individually isolated with 240V AC/DC blown fuse LED indicators and 4 terminals/input	1492-IFM40F-FS240A-4	—	—	—	—	—	—
Relay Master ❹❺		—					
40-pin master with eight (8) 24V DC relays	1492-XIM4024-8R	—	—	—	H	H	—
40-pin master with sixteen (16) 24V DC relays	1492-XIM4024-16R	1492-RXIM4024-16R❽	—	—	H	H	—
40-pin master with sixteen (16) 24V DC relays with fusing	1492-XIM4024-16RF	—	—	—	H	H	—
Relay Expander (LED Indicating) ❹❺		—					
Expander with eight (8) 24V DC relays	1492-XIM24-8R	1492-RXIM24-8R❾	—	—	❶	❶	—
Expander with sixteen (16) 24V DC relays with fusing	1492-XIM24-16RF	—	—	—	❸	❸	—
Expander with eight (8) 120V AC relays	1492-XIM120-8R	—	—	—	—	—	—
Fusible Expander (LED Indicating)		—					
8-channel expander with 24V DC blown fuse indicators	1492-XIMF-F24-2	—	—	—	❶	❶	—
8-channel expander with 120V AC blown fuse indicators	1492-XIMF-F120-2	—	—	—	—	—	—
Feed through Expander		—					
Expander with eight feed-through channels	1492-XIMF-2	—	—	—	❶	❶	—

Note: Footnotes are on the following page.

❶ Can have up to two or three expandable modules depending upon master used (total 32 pts or less), extender cable is provided.
❷ Cables are available in standard lengths of 0.5 m 1.0 m, 2.5 m, and 5.0 m. To order, insert the code for the desired cable length into the catalog number 005 = 0.5 m (010 = 1.0 m, 025 = 2.5 m, and 050 = 5.0 m), and insert the letter in the box. Example: **Catalog Number 1492-CABLE050Y**is for a 5.0 m cable, and the letter Y.
❸ 1492-XIM24-16RF is to be used with 1492-XIM4024-16R and 1492-XIM4024-16RF 32 PT. Only.
❹ The voltage rating is relay control/coil voltage. For relay contact ratings, refer to page 192.
❺ The LED indicates the PLC output status.
❻ Compatible Removable Terminal Block (RTB) plug; 1492-RTB20N (screw style terminals) or 1492-RTB20P (push-in style terminals). ORDER PLUGS SEPARATELY.
❼ Compatible Removable Terminal Block (RTB) plug; 1492-RTB17N (screw style terminals) or 1492-RTB17P (push-in style terminals). ORDER PLUGS SEPARATELY.
❽ Compatible Removable Terminal Block (RTB) plug; 1492-RTB14N (screw style terminals) or 1492-RTB14P (push-in style terminals). ORDER PLUGS SEPARATELY.
❾ Compatible Removable Terminal Block (RTB) plug; 1492-RTB12N (screw style terminals) or 1492-RTB12P (push-in style terminals). ORDER PLUGS SEPARATELY.

Selection Tables, Continued

Bulletin 1746 SLC 500 IFMs and Cables, Continued

These **pre-wired cables** have a pre-wired removable terminal block (RTB) on one end to connect to the front of a Bulletin 1746 digital I/O module and a connector on the other end to plug into a 20- or 40-terminal IFM/XIM. You must first select the IFM/XIM from one of the preceding selection tables.

Pre-Wired Cables for Bulletin 1746 Digital I/O Modules

Cable Cat. No.	Standard Cable Lengths	Build-to-Order Available	No. of Conductors	Mating 1746 I/O Module Catalog Number
1492-CABLE❶A	0.5, 1.0, 2.5, 5.0 m	Yes	20	1746-IA16, -IM16
1492-CABLE❶B	0.5, 1.0, 2.5, 5.0 m	Yes	20	1746-IB16, -IH16, -IN16, -ITB16, -ITV16
1492-CABLE❶C	0.5, 1.0, 2.5, 5.0 m	Yes	20	1746-OA16
1492-CABLE❶CR	0.5, 1.0, 2.5, 5.0 m	Yes	20	1746-OA16
1492-CABLE❶D	0.5, 1.0, 2.5, 5.0 m	Yes	20	1746-OW16, -OX8
1492-CABLE❶E	0.5, 1.0, 2.5, 5.0 m	Yes	20	1746-IG16, -OB16, -OB16E, -OBP16, -OG16, -OV16, -OVP16
1492-CABLE❶G	0.5, 1.0, 2.5, 5.0 m	Yes	20	1746-OA16
1492-CABLE❶H	0.5, 1.0, 2.5, 5.0 m	Yes	40	1746-IB32, -IV32, -OB32, -OB32E, -OV32
1492-CABLE❶N	0.5, 1.0, 2.5, 5.0 m	Yes	20	1746-OW16, -OX8
1492-CABLE❶S	0.5, 1.0, 2.5, 5.0 m	Yes	20	1746-OX8

❶ Cables are available in standard lengths of 0.5 m, 1.0 m, 2.5 m, and 5.0 m. To order, insert the code for the desired cable length into the catalog number (005 = 0.5 m, 010 = 1.0 m, 025 = 2.5 m, and 050 = 5.0 m). Example: **Catalog Number 1492-CABLE005N** is for a 0.5 m cable that could be used to connect a Catalog Number 1492-IFM20D24N IFM to a Catalog Number 1746-OW16 I/O module. Build-to-order lengths are also available.

The **I/O module-ready cables** have a pre-wired RTB on one end to plug onto the front of a Bulletin 1746 I/O module and 20 or 40 individually colored #18 AWG conductors on the other end. These cables provide the convenience of pre-wired connections at the I/O module end, while still allowing the flexibility to field-wire to standard terminal blocks of your choice.

I/O Module-Ready Cables for Bulletin 1746 Digital I/O Modules ❸

Cable Cat. No.	Standard Cable Lengths	Build-to-Order Available	No. of Conductors	Mating 1746 I/O Module Catalog Number
1492-CABLE❷N3	1.0, 2.5, 5.0 m	Yes	40	1746-IB32, -IV32, -OB32, -OV32, -OB32E
1492-CABLE❷RTBB	1.0, 2.5, 5.0 m	Yes	20	1746-IB16, -IC16, -IG16, -IH16, -IN16, -ITB16, -ITV16, -IV16, -OB16, -OB16E, -OBP8, -OBP16, -OG16, -OV16, -OVP16
1492-CABLE❷RTBO	1.0, 2.5, 5.0 m	Yes	20	1746-OW16, -OX8
1492-CABLE❷RTBR	1.0, 2.5, 5.0 m	Yes	20	1746-IA16, -OA16, -OAP12, -IM16

❷ Cables are available in standard lengths of 1.0 m, 2.5 m, and 5.0 m. To order, insert the code for the desired cable length into the catalog number (010 = 1.0 m, 025 = 2.5 m, and 050 = 5.0 m). Example: **Catalog Number 1492-CABLE050RTBR** is for a 5.0 m cable with a pre-wired Catalog Number 1746-RT25R RTB on one end.

❸ Digital I/O module-ready cables should not be used with analog module as a cable shield and drain wire is not provided.

Note: The following I/O Modules do not have RTBs: 1746-IA4, 1746-IA8, 1746-IB8, 1746-IM4, 1746-IM8, 1746-IV8, 1746-OA8, 1746-OB8.

Selection Tables, Continued

Bulletin 1746 SLC 500 AIFMs and Cables

Bulletin 1746 Analog I/O Modules ❶

Description of AIFM	Cat. No. for Wiring System Module with Fixed Terminal Block	Cat. No. for Wiring System Module with Removable Terminal Block Socket Assembly (order plugs separately	I/O Module Catalog Number 1746-…															
			HSCE (Diff.)	HSCE2 (Diff.)	FIO4I	FIO4V	NI4	NI8	NIO4I	NIO4V	NO4I	NO8I	NO4V	NO8V	NR4	QS	NI16I	NI16V
Feed-through																		
4-channel input, output or 2-in/2-out combination with 3 terminals/channel	1492-AIFM4-3	1492-RAIFM4-3❸	—	—	L	L	A	—	L	L	B	—	B	—	—	—	—	—
6-channel isolated with 3…4 terminals/channel	1492-AIFM6S-3	1492-RAIFM6S-3❹	—	—	—	—	—	—	—	—	—	—	—	—	D	—	—	—
8- or 16-channel input or output with 3 terminals/channel	1492-AIFM8-3	1492-RAIFM8-3❺	—	—	—	—	—	C	—	—	—	R	—	R	—	—	A46	A46
Thermocouple																		
6-channel with 3 terminals/channel❷	1492-AIFM6TC-3	—	—	—	—	—	—	—	—	—	—	—	—	—	—	—	—	—
High-Speed Counter/Encoder																		
2-channel center input/2 outputs	1492-AIFMCE4	—	K	P	—	—	—	—	—	—	—	—	—	—	—	—	—	—
Fusible High Speed Counter/Encoder																		
2-channel fused counter input/4 fused outputs	1492-AIFMCE4-F	—	K	P	—	—	—	—	—	—	—	—	—	—	—	—	—	—
Fusible Analog																		
2-channel input, 2-channel output with 24V DC blown fuse indicators, test points, 5 terminals/input, 3 terminals/output	1492-AIFM4C-F-5	—	—	—	L	L	—	—	L	L	—	—	—	—	—	—	—	—
4-channel input with 24V DC blown fuse indicators, test points, 5 terminals/input	1492-AIFM4I-F-5	—	—	—	—	—	A	—	—	—	—	—	—	—	—	—	—	—
8-channel input with 24V DC blown fuse indicators, 5 terminals/channel	1492-AIFM8-F-5	—	—	—	—	—	—	C	—	—	—	—	—	—	—	—	—	—
16-channel input with 24V DC blown fuse indicators, 3 terminals/channel	1492-AIFM16-F-3	—	—	—	—	—	—	—	—	—	—	—	—	—	—	—	A46	A46
16-channel input with 24V DC blown fuse indicators, 5 terminals/channel	1492-AIFM16-F-5	—	—	—	—	—	—	—	—	—	—	—	—	—	—	—	—	—
4-input/4-output channel with 8 fuses and 24V DC blown fuse indicators	1492-AIFMQS	—	—	—	—	—	—	—	—	—	—	—	—	—	—	Q	—	—

❶ Cables are available in standard lengths of 0.5 m 1.0 m, 2.5 m, and 5.0 m. To order, insert the code for the desired cable length into the catalog number 005 = 0.5 m (010 = 1.0 m, 025 = 2.5 m, and 050 = 5.0 m), and insert the letter in the box. Example: **Catalog Number 1492-ACABLE025A** is for a 2.5 m cable, and the letter A.

❷ Cannot be used with SLC I/O.

❸ Compatible Removable Terminal Block (RTB) plug; 1492-RTB8N (screw style terminals) or 1492-RTB8P (push-in style terminals). ORDER PLUGS SEPARATELY.

❹ Compatible Removable Terminal Block (RTB) plug; 1492-RTB12N (screw style terminals) or 1492-RTB12P (push-in style terminals). ORDER PLUGS SEPARATELY.

❺ Compatible Removable Terminal Block (RTB) plug; 1492-RTB16N (screw style terminals) or 1492-RTB16P (push-in style terminals). ORDER PLUGS SEPARATELY.

These **pre-wired cables** have a pre-wired RTB on one end to connect to the front of a Bulletin 1746 analog I/O module and a connector on the other end to plug into a 15- or 25-pin D-shell terminal AIFM. To use this table, you must first have selected an AIFM from the preceding table.

Pre-Wired Cables for Bulletin 1746 Analog I/O Modules

Cable Catalog Number	Standard Cable Lengths (m)	Build-to-Order Available	AIFM Connector	Mating 1746 I/O Module Catalog Number
1492-ACABLE❶A	0.5, 1.0, 2.5, 5.0	Yes	15-pin D-shell	1746-NI4
1492-ACABLE❶B	0.5, 1.0, 2.5, 5.0	Yes	15-pin D-shell	1746-NO4I, -NO4V
1492-ACABLE❶C	0.5, 1.0, 2.5, 5.0	Yes	25-pin D-shell	1746-NI8
1492-ACABLE❶D	0.5, 1.0, 2.5, 5.0	Yes	25-pin D-shell	1746-NR4
1492-ACABLE❶K	0.5, 1.0, 2.5, 5.0	Yes	25-pin D-shell	1746-HSCE
1492-ACABLE❶L	0.5, 1.0, 2.5, 5.0	Yes	15-pin D-shell	1746-NIO4I, -NIO4V, -FIO4I, -FIO4V
1492-ACABLE❶P	0.5, 1.0, 2.5, 5.0	Yes	25-pin D-shell	1746-HSCE2
1492-ACABLE❶Q	0.5, 1.0, 2.5, 5.0	Yes	25-pin D-shell	1746-QS
1492-ACABLE❶R	0.5, 1.0, 2.5, 5.0	Yes	25-pin D-shell	1746-N08I, N08V
1492-ACAB❶A46	0.5, 1.0, 2.5, 5.0	Yes	25-pin D-shell	1746-NI16I, -NI16V

❶ To order, insert the code for the desired cable length into the catalog number (005 = 0.5 m, 010 = 1.0 m, 025 = 2.5 m, and 050 = 5.0 m). Example: **Catalog Number 1492-ACABLE005A** is for a 0.5 m cable that could be used to connect a Catalog Number 1492-AIFM4I-F-5 IFM to a Catalog Number 1746-NI4 I/O module.

Selection Tables, Continued

Using Bulletin 1756 Selection Tables to Make Valid 1492 Wiring System Module Catalog Numbers

Follow these steps when using the selection tables to make valid catalog numbers.:

1. Find the appropriate table based on the catalog number of the 1756 I/O module.
2. Find the column in the selected table for the 1756 I/O module.
3. Follow the column down to determine which Wiring System Modules are compatible with the I/O module as indicated by letter code. If there is no letter code, the 1492 Wiring System Module is not compatible with the I/O module. NOTE: The letter codes designate the compatible 1492 cable for that 1756 I/O and 1492 Wiring System Module combination.
4. Select the desired 1492 Wiring System Module.
5. Configure the cable catalog number using 1492-CABLE❶ (for digital cables) or 1492-ACABLE❶ (for analog cables). See footnote ❶ on pages 40 and 42.

Bulletin 1756 ControlLogix IFMs and Cables

Bulletin 1756 Digital 8-Point and 16-Point I/O Modules ❷

Description of 20-PIN IFM	Cat. No. for Wiring System Module with Fixed Terminal Block	Cat. No. for Wiring System Module with Removable Terminal Block Socket Assembly (order plugs separately	I/O Module Catalog Number 1756-…														
			IA8D	IA16	IB16	IC16	IN16	IV16	OA8	OA8D	OA8E	OA16	OB8	OB16E	OC8	ON8	OV16E
Feed-through																	
Standard 264V AC/DC Max.	1492-IFM20F	1492-RIFM20F❻	U	X	X	X	X	X	U	U	U	X	U	X	U	U	X
Narrow standard 132V AC/DC Max.	1492-IFM20FN	1492-RIFM20FN❼	U	X	X	X	X	X	U	U	U	X	U	X	U	U	X
Extra terminals (2 per I/O) 264V AC/DC Max.	1492-IFM20F-2	1492-RIFM20F-2❻	U	X	X	X	X	X	U	U	U	X	U	X	U	U	X
3-wire sensor type input devices 132V AC/DC Max.	1492-IFM20F-3	—	—	X	X	X	X	X	—	—	—	—	—	—	—	—	—
LED Indicating																	
Standard with 24V AC/DC LEDs	1492-IFM20D24	—	—	—	X	—	X	X	—	—	—	—	—	X	—	—	X
Narrow standard with 24V AC/DC LEDs	1492-IFM20D24N	—	—	—	X	—	X	X	—	—	—	—	—	X	—	—	—
Standard with 120V AC/DC LEDs	1492-IFM20D120 ❸	—	U	X	—	—	—	—	—	—	—	—	—	—	—	—	—
Narrow standard with 120V AC LEDs	1492-IFM20D120N	—	U	X	—	—	—	—	—	—	—	X	—	—	—	—	—
24V AC/DC LEDs and extra terminals for outputs	1492-IFM20D24-2	—	—	—	—	—	—	—	—	—	—	—	—	X	—	—	X
24V AC/DC LEDs and extra terminals for inputs	1492-IFM20D24A-2	—	—	—	X	—	X	X	—	—	—	—	—	—	—	—	—
120V AC LEDs and extra terminals for outputs	1492-IFM20D120-2	—	—	—	—	—	—	—	—	—	—	X	—	—	—	—	—
120V AC LEDs and extra terminals for inputs	1492-IFM20D120A-2	—	U	X	—	—	—	—	—	—	—	—	—	—	—	—	—
3-wire sensor with 24V AC/DC LEDs	1492-IFM20D24-3	—	—	—	X	—	X	X	—	—	—	—	—	—	—	—	—
8 Individually isolated with 24/48V AC/DC LEDs and 4 terminals/output	1492-IFM20DS24-4	—	—	—	—	—	—	—	—	—	—	—	W	—	W	W	—
8 Individually isolated with 120V AC LEDs and 4 terminals/output	1492-IFM20DS120-4	—	—	—	—	—	—	—	W	V	V	—	—	—	—	—	—
240V AC LEDs with extra terminals for outputs	1492-IFM20D240-2	—	—	—	—	—	—	—	—	—	—	—	—	—	—	—	—
240V AC LEDs with extra terminals for inputs	1492-IFM20D240A-2	—	—	—	—	—	—	—	—	—	—	—	—	—	—	—	—
Fusible																	
120V AC/DC with extra terminals for outputs	1492-IFM20F-F-2	1492-RIFM20F-F-2❻	—	—	—	—	—	—	—	—	—	X	—	X	—	—	X
Extra terminals with 24V AC/DC blown fuse LED indicators	1492-IFM20F-F24-2	1492-RIFM20F-F24-2❻	—	—	—	—	—	—	—	—	—	—	—	X	—	—	X
Extra terminals with 120V AC/DC blown fuse LED indicators	1492-IFM20F-F120-2	1492-RIFM20F-F120-2❻	—	—	—	—	—	—	—	—	—	X	—	—	—	—	—

Note: Footnotes are on the following page.

Bulletin 1756 Digital 8-Point and 16-Point I/O Modules (Continued)❷

Description of 20-PIN IFM	Cat. No. for Wiring System Module with Fixed Terminal Block	Cat. No. for Wiring System Module with Removable Terminal Block Socket Assembly (order plugs separately	I/O Module Catalog Number 1756-…														
			IA8D	IA16	IB16	IC16	IN16	IV16	OA8	OA8D	OA8E	OA16	OB8	OB16E	OC8	ON8	OV16E
Extra terminals with 240V AC/DC blown fuse LED indicators	1492-IFM20F-F240-2	—	—	—	—	—	—	—	—	—	—	X	—	—	—	—	—
Extra terminals with 24V AC/DC blown fuse LED indicators	1492-IFM20F-F24A-2	1492-RIFM20F-F24A-2❻	—	—	X	—	X	—	—	—	—	—	—	—	—	—	—
Extra terminals with 120V AC/DC blown fuse LED indicators	1492-IFM20F-F120A-2	1492-RIFM20F-F120A-2❻	—	X	—	—	—	—	—	—	—	—	—	—	—	—	—
8 Individually isolated 120V AC/DC with extra terminals for outputs	1492-IFM20F-FS-2	—	—	—	—	—	—	—	W	V	V	—	W	—	W	W	—
8 Individually isolated with extra terminals/output and 24V AC/DC blown fuse LED indicators	1492-IFM20F-FS24-2	—	—	—	—	—	—	—	—	—	—	—	W	—	W	W	—
Two 4-point isolated groups with four terminals/input and 24V AC/DC blown fuse LED indicators	1492-IFM20F-FS24A-4	—	—	—	—	—	—	—	—	—	—	—	—	—	—	—	—
8 Individually isolated with extra terminals output, and 120V AC/DC blown fuse LED indicators	1492-IFM20F-FS120-2	—	—	—	—	—	—	—	W	V	V	—	—	—	—	—	—
8 Individually isolated with 4 terminals/output and 120V AC/DC blown fuse LED indicators	1492-IFM20F-FS120-4	—	—	—	—	—	—	—	W	V	V	—	—	—	—	—	—
Two 4-point isolated groups with four terminals/input and 120V AC/DC blown fuse indicators	1492-IFM20F-FS120A-4	—	U	—	—	—	—	—	—	—	—	—	—	—	—	—	—
8 Individually isolated with 4 terminals/output and 240V AC/DC blown fuse LED indicators	1492-IFM20F-FS240-4	—	—	—	—	—	—	—	W	—	—	—	—	—	—	—	—
Relay Master (LED Indicating) ❹❺																	
20-pin master with eight (8) 24V DC relays	1492-XIM2024-8R❽	—	—	—	—	—	—	—	—	—	—	—	—	X	—	—	—
20-pin master with eight (8) 120V AC relays	1492-XIM20120-8R❾	—	—	—	—	—	—	—	—	—	—	X	—	—	—	—	—
20-pin master with sixteen (16) 24V CD relays	1492-XIM2024-16R	—	—	—	—	—	—	—	—	—	—	—	—	X	—	—	—
20-pin master with sixteen (16) 24V DC relays with fusing	1492-XIM2024-16RF	—	—	—	—	—	—	—	—	—	—	—	—	X	—	—	—
20-pin master with sixteen (16) 120V AC relays	1492-XIM20120-16R	—	—	—	—	—	—	—	—	—	—	X	—	—	—	—	—
20-pin master with sixteen (16) 120V AC relays with fusing	1492-XIM20120-16RF	—	—	—	—	—	—	—	—	—	—	X	—	—	—	—	—
Relay Expander (LED Indicating) ❹❺																	
Expander with eight (8) 24V DC relays	1492-XIM24-8R	1492-RXIM24-8R*	—	—	—	—	—	—	—	—	—	—	—	❶	—	—	—
Expander with eight (8) 120V AC Relays	1492-XIM120-8R	—	—	—	—	—	—	—	—	—	—	❶	—	—	—	—	—
Fusible Expander																	
Expander with eight (8) 24V channels with blown fuse indicators	1492-XIMF-F24-2	—	—	—	—	—	—	—	—	—	—	—	—	❶	—	—	—
Expander with eight (8) 120V channels with blown fuse indicators	1492-XIMF-F120-2	—	—	—	—	—	—	—	—	—	—	❶	—	—	—	—	—
Feed-through Expander																	
Expander with eight (8) feed-through channels	1492-XIMF-2	—	—	—	—	—	—	—	—	—	—	❶	—	❶	—	—	—

❶ Can have up to 1 expandable module depending upon master used (total 16 pts or less) extender cable is provided.
❷ Cables are available in standard lengths of 0.5 m 1.0 m, 2.5 m, and 5.0 m. To order, insert the code for the desired cable length into the catalog number 005 = 0.5 m (010 = 1.0 m, 025 = 2.5 m, and 050 = 5.0 m), and insert the letter in the box. Example: **Catalog Number 1492-CABLE050W** is for a 5.0 m cable, and the letter W.
❸ This IFM is not recommended for use with PLC I/O modules that have an off-state leakage current exceeding 0.5 mA. Use a 1492-IFM20D120N or 1492-IFM20D120A-2 for inputs. Use 1492-IFM20D120-2 for outputs.
❹ The voltage rating is relay control/coil voltage. For relay contact ratings, refer to page 192.
❺ The LED indicates the PLC output status.
❻ Compatible Removable Terminal Block (RTB) plug 1492-RTB20N (screw style terminals) or 1492-RTB20P (push-in style terminals). ORDER PLUGS SEPARATELY.
❼ Compatible Removable Terminal Block (RTB) plug; 1492-RTB10N (screw style terminals) or 1492-RTB10P (push-in style terminals). ORDER PLUGS SEPARATELY.
❽ Expandable to 16 using XIM24-8R or XIMF-24-2.
❾ Expandable to 16 using XIM120-8R or XIMF-24-2.
✱ Compatible Removable Terminal Block (RTB) plug; 1492-RTB12N (screw style terminals) or 1492-RTB12P (push-in style terminals). ORDER PLUGS SEPARATELY.

Selection Tables, Continued

Bulletin 1756 ControlLogix IFMs and Cables, Continued

Bulletin 1756 Digital 16-Point Isolated and 32-Point I/O Modules ❷

Description of 40-PIN IFM	Cat. No. for Wiring System Module with Fixed Terminal Block	Cat. No. for Wiring System Module with Removable Terminal Block Socket Assembly (order plugs separately	I/O Module Catalog Number 1756-…																	
			IA16I	IB16D	IB16I	IA32	IB32	IV32	IH16I	IM16I	OA16I	OB8EI	OB16D	OB16I	OB16IS	OB32	OV32E	OH8I	OW16I	OX8I
Feed-through																				
Standard 132V AC/DC Max.	1492-IFM40F	1492-RIFM40F❽	Y	Y	Y	Z	Z	Z	Y	—	Y	Y	Y	Y	Y	Z	Z	Y	Y	Y
Extra terminals (2 per I/O) 132V AC/DC Max.	1492-IFM40F-2	1492-RIFM40F-2❽	—	Y	—	Z	Z	Z	—	—	—	—	Y	—	—	Z	Z	—	—	—
3-wire sensor type input devices 60V AC/DC Max.	1492-IFM40F-3	—	—	—	—	—	Z	Z	—	—	—	—	—	—	—	—	—	—	—	—
LED Indicating																				
Standard with 24V AC/DC LEDs	1492-IFM40D24	1492-RIFM40D24❽	—	—	—	—	Z	Z	—	—	—	—	—	—	—	Z	Z	—	—	—
24V AC/DC LEDs and extra terminals for outputs	1492-IFM40D24-2	—	—	—	—	—	—	—	—	—	—	—	—	—	—	Z	Z	—	—	—
24V AC/DC LEDs and extra terminals for inputs	1492-IFM40D24A-2	1492-RIFM40D24A-2❽	—	—	—	—	Z	Z	—	—	—	—	—	—	—	—	—	—	—	—
120V AC LEDs and extra terminals for outputs	1492-IFM40D120-2	—	—	—	—	—	—	—	—	—	—	—	—	—	—	—	—	—	—	—
120V AC LEDs and extra terminals for inputs	1492-IFM40D120A-2	—	—	—	—	Z	—	—	—	—	—	—	—	—	—	—	—	—	—	—
3-wire sensor with 24V AC/DC LEDs	1492-IFM40D24-3	—	—	—	—	—	Z	Z	—	—	—	—	—	—	—	—	—	—	—	—
16 Individually isolated with 24/48V AC/DC LEDs and 4 terminals/output	1492-IFM40DS24-4	—	—	—	—	—	—	—	—	—	—	Y	Y ♣	Y	Y	—	—	—	Y	Y
16 Individually isolated with 24V AC/DC LEDs and 4 terminals/input	1492-IFM40DS24A-4	—	—	Y	Y	—	—	—	—	—	—	—	—	—	—	—	—	—	—	—
16 Individually isolated with 120V AC LEDs and 4 terminals/output	1492-IFM40DS120-4	—	—	—	—	—	—	—	—	—	Y	—	—	—	—	—	—	—	Y	Y
16 Individually isolated with 120V AC LEDs and 4 terminals/input	1492-IFM40DS120A-4	—	Y	—	—	—	—	—	—	—	—	—	—	—	—	—	—	—	—	—
16 Individually isolated with 240V AC LEDs and 4 terminals/input	1492-IFM40DS240A-4	—	—	—	—	—	—	—	—	Y	—	—	—	—	—	—	—	—	—	—
Fusible																				
120V AC/DC with extra terminals for outputs	1492-IFM40F-F-2	—	—	—	—	—	—	—	—	—	—	—	—	—	—	Z	Z	—	—	—
Extra terminals with 24V AC/DC blown fuse indicators for outputs	1492-IFM40F-F24-2	1492-RIFM40F-F24-2❽	—	—	—	—	—	—	—	—	—	—	—	—	—	Z	Z	—	—	—
16 Individually fused with 24V DC blown fuse low leakage (0.05 mA) LED circuit, 4 isolated groups, 2 terminals/output	1492-IFM40F-F24D-2	—	—	—	—	—	—	—	—	—	—	—	Y	—	—	—	—	—	—	—
Individually Fused w/24V DC blown fuse low leakage (0.05 mA) LED circuit, 4 isolated groups, 4 terminals/input	1492-IFM40F-F24AD-4	—	—	Y	—	—	—	—	—	—	—	—	—	—	—	—	—	—	—	—
Extra terminals with 120V AC/DC blown fuse indicators for outputs	1492-IFM40F-F120-2	—	—	—	—	—	—	—	—	—	—	—	—	—	—	—	—	—	—	—
16 Individually isolated with extra terminals for 120V AC/DC outputs	1492-IFM40F-FS-2	—	—	—	—	—	—	—	—	—	Y	Y	Y	Y ➤	Y ➤	—	—	Y	Y	Y
16 Individually isolated with extra terminals and 24V AC/DC blown fuse indicators for outputs	1492-IFM40F-FS24-2	—	—	—	—	—	—	—	—	—	—	Y	❼	Y ➤	Y ➤	—	—	—	Y	Y
16 Individually isolated with 24V AC/DC blown fuse indicators and 4 terminals/output	1492-IFM40F-FS24-4	—	—	—	—	—	—	—	—	—	—	Y	❼	Y ➤	Y ➤	—	—	—	Y	Y
16 Individually isolated 240V AC/DC with 4 terminals/output	1492-IFM40F-FS-4	—	—	—	—	—	—	—	—	—	Y	Y	Y	Y ➤	Y ➤	—	—	—	Y	Y
16 Individually isolated with extra terminals and 120V AC/DC blown fuse LED indicators	1492-IFM40F-FS120-2	1492-RIFM40F-FS120-2❽	—	—	—	—	—	—	—	—	Y	—	—	—	—	—	—	Y	Y	Y
16 Individually isolated with 120V AC/DC blown fuse indicators and 4 terminals/output	1492-IFM40F-FS120-4	1492-RIFM40F-FS120-4❾	—	—	—	—	—	—	—	—	Y	—	—	—	—	—	—	—	Y	Y

Bulletin 1756 Digital 16-Point Isolated and 32-Point I/O Modules (Continued)❷

Description of 40-PIN IFM	Cat. No. for Wiring System Module with Fixed Terminal Block	Cat. No. for Wiring System Module with Removable Terminal Block Socket Assembly (order plugs separately	I/O Module Catalog Number 1756-…																	
			IA16I	IB16D	IB16I	IA32	IB32	IV32	IH16I	IM16I	OA16I	OB8EI	OB16D	OB16I	OB16IS	OB32	OV32E	OH8I	OW16I	OX8I
16 Individually isolated with 240V AC/DC blown fuse indicators and 4 terminals/output	1492-IFM40F-FS240-4	—	—	—	—	—	—	—	—	—	Y	—	—	—	—	—	—	—	Y	Y
16 Individually isolated with 24V AC/DC blown fuse indicators and 4 terminals/input	1492-IFM40F-FS24A-4	—	—	❻	Y	—	—	—	—	—	—	—	—	—	—	—	—	—	—	—
16 Individually isolated 120V AC/DC with 4 terminals/input	1492-IFM40F-FSA-4	—	Y	Y	Y	—	—	—	Y	—	—	—	—	—	—	—	—	—	—	—
16 Individually Isolated with 120V AC/DC blown fuse indicators and 4 terminals/input	1492-IFM40F-FS120A-4	1492-RIFM40F-FS120A-4❾	Y	—	—	—	—	—	Y	—	—	—	—	—	—	—	—	—	—	—
16 Individually isolated with 240V AC/DC blown fuse indicators and 4 terminals/input	1492-IFM40F-FS240A-4	—	—	—	—	—	—	—	—	Y	—	—	—	—	—	—	—	—	—	—
Relay Master (LED Indicating) ❹❺																				
40-pin master with eight (8) 24V DC relays	1492-XIM4024-8R	—	—	—	—	—	—	—	—	—	—	—	—	—	—	Z	—	—	—	—
40-pin master with sixteen (16) 24V DC relays	1492-XIM4024-16R	1492-RXIM4024-16R❿	—	—	—	—	—	—	—	—	—	—	—	—	—	Z	—	—	—	—
40-pin master with sixteen (16) 24V DC relays with fusing	1492-XIM4024-16RF	—	—	—	—	—	—	—	—	—	—	—	—	—	—	Z	—	—	—	—
Relay Expander (LED Indicating) ❹❺																				
Expander with eight (8) 24V DC relays	1492-XIM24-8R	1492-RXIM24-8R✪	—	—	—	—	—	—	—	—	—	—	—	—	—	❶	—	—	—	—
Expander with eight (8) 120V AC relays	1492-XIM120-8R	—	—	—	—	—	—	—	—	—	—	—	—	—	—	—	—	—	—	—
Fusible Expander																				
8-channel expander with 24V DC blown fuse indicators	1492-XIMF-F24-2	—	—	—	—	—	—	—	—	—	—	—	—	—	—	❶	—	—	—	—
8-channel expander with 120V AC blown fuse indicators	1492-XIMF-F120-2	—	—	—	—	—	—	—	—	—	—	—	—	—	—	—	—	—	—	—
Expander with sixteen (16) 24V DC relays with fusing	1492-XIM24-16RF	—	—	—	—	—	—	—	—	—	—	—	—	—	—	❸	—	—	—	—
Feed-through Expander																				
Expander with eight (8) feed-through channels	1492-XIMF-2	—	—	—	—	—	—	—	—	—	—	—	—	—	—	❶	—	—	—	—

❶ Can have up to two or three expandable modules depending upon master used (total 32 pts or less), extender cable is provided.

❷ Cables are available in standard lengths of 0.5 m 1.0 m, 2.5 m, and 5.0 m. To order, insert the code for the desired cable length into the catalog number 005 = 0.5 m (010 = 1.0 m, 025 = 2.5 m, and 050 = 5.0 m), and insert the letter in the box. Example: **Catalog Number 1492-CABLE050Y** is for a 5.0 m cable, and the letter Y.

❸ One 1492-XIM24-16RF is to be used with one 1492-XIM4024-16R or 1492-XIM4024-16RF master (32 PT. Only).

❹ The voltage rating is relay control/coil voltage. For relay contact ratings, refer to page 192.

❺ The LED indicates the PLC output status.

❻ The 1492-IFM40F-FS24A-4 module and 1492-CABLE❷Y cable can be used with the 1756-IB16D module. However, due to the 1492-IFM40F-FS24A-4 module's blown fuse leakage current rating, the "wire off" diagnostic function of the 1756-IB16D will not indicate a blown or removed fuse as a wire off condition. If you require this diagnostic to function for a blown or removed fuse, you must use a 1492-IFM40F-F24AD-4.

❼ The 1492-IFM40F-FS24-2 and 1492-IFM40F-FS24-4 module and 1492-CABLE❷Y cable can be used with the 1756-OB16D module. However, due to the 1492-IFM40F-FS24-2 and 1492-IFM40F-FS24-4 module's blown fuse leakage current rating, the "no load" diagnostic function of the 1756-OB16D will not indicate a blown or removed fuse as a no load condition. If you require this diagnostic to function for a blown or removed fuse, you must use a 1492-IFM40F-F24D-2.

❽ Compatible Removable Terminal Block (RTB) plug; 1492-RTB20N (screw style terminals) or 1492-RTB20P (push-in style terminals). ORDER PLUGS SEPARATELY.

❾ Compatible Removable Terminal Block (RTB) plug; 1492-RTB17N (screw style terminals) or 1492-RTB17P (push-in style terminals). ORDER PLUGS SEPARATELY.

❿ Compatible Removable Terminal Block (RTB) plug; 1492-RTB14N (screw style terminals) or 1492-RTB14P (push-in style terminals). ORDER PLUGS SEPARATELY.

✪ Compatible Removable Terminal Block (RTB) plug; 1492-RTB12N (screw style terminals) or 1492-RTB12P (push-in style terminals). ORDER PLUGS SEPARATELY.

➤ Do not use this module in output sinking mode with fused IFM modules as the IFM module fuses will not properly protect the circuit.

♣ IFMs LED provides PLC output ON/OFF indication. Due to the magnitude of current through the LED, the 1756-0B16D PLC module "No Load" diagnostic function will not work. If this function is required, use the 1492-IFM40F-2.

Selection Tables, Continued

Bulletin 1756 ControlLogix IFMs and Cables, Continued

These **pre-wired cables** have a pre-wired RTB on one end to connect to the front of a Bulletin 1756 digital I/O module and a connector on the other end to plug into a 20- or 40-terminal IFM/XIM. You must first select the IFM/XIM from one of the preceding selection tables.

Pre-Wired Cables for Bulletin 1756 Digital I/O Modules

Cable Cat. No.	Standard Cable Lengths	Build-to-Order Available	No. of Conductors	Mating 1756 I/O Module Catalog Number
1492-CABLE❶U	0.5, 1.0, 2.5, 5.0 m	Yes	20	1756-IA8D, -OA8, -OA8D, -OA8E, -OB8, -OC8, -ON8
1492-CABLE❶V	0.5, 1.0, 2.5, 5.0 m	Yes	20	1756-OA8D, -OA8E
1492-CABLE❶W	0.5, 1.0, 2.5, 5.0 m	Yes	20	1756-OA8, -OB8, -OC8, -ON8
1492-CABLE❶X	0.5, 1.0, 2.5, 5.0 m	Yes	20	1756-IA16, -IB16, -IC16, -IN16, -IV16, -OA16, -OB16E, -OV16E
1492-CABLE❶Y	0.5, 1.0, 2.5, 5.0 m	Yes	40	1756-IA16I, -IB16D, -IB16I, -IH16, -IM16I, -OA16I, -OB8EI, -OB16D, -OB16I, -OB16IS, -OH8I, -OW16I, -OX8I
1492-CABLE❶Z	0.5, 1.0, 2.5, 5.0 m	Yes	40	1756-IB32, -OB32, -IV32, -OV32E

❶ Cables are available in standard lengths of 0.5 m, 1.0 m, 2.5 m, and 5.0 m. To order, insert the code for the desired cable length into the catalog number (005 = 0.5 m, 010 = 1.0 m, 025 = 2.5 m, and 050 = 5.0 m). Example: **Catalog Number 1492-CABLE005Y** is for a 0.5 m cable that could be used to connect a Catalog Number 1492-IFM40F IFM to a Catalog Number 1756-IA16I I/O module.

The **I/O module-ready cables** have a pre-wired RTB on one end to plug onto the front of a Bulletin 1756 I/O module and 20 or 40 individually colored #18 AWG conductors on the other end. These cables provide the convenience of pre-wired connections at the I/O module end, while still allowing the flexibility to field-wire to standard terminal blocks of your choice.

I/O Module-Ready Cables for Bulletin 1756 Digital I/O Modules ❸

Cable Cat. No.	Standard Cable Lengths	Build-to-Order Available	No. of Conductors	Mating 1756 I/O Module Catalog Number
1492-CABLE❷TBNH	1.0, 2.5, 5.0 m	Yes	20	1756-IA8D, -IA16, -IB16, -IC16, -IN16, -IV16, -OA8, -OA8D, -OA8E, -OA16, -OB8, -OB16E, -OC8, -ON8, -OV16E
1492-CABLE❷TBCH	1.0, 2.5, 5.0 m	Yes	40	1756-IA16I, -IA32, -IB16D, -IB16I, -IB32, -IV32, -IH16I, -IM16I, -OA16I, -OB8EI, -OB16D, -OB16I, -OB16IS, -OB32, -OV32E, -OH8I, -OW16I, -OX8I

❷ Cables are available in standard lengths of 1.0 m, 2.5 m, and 5.0 m. To order, insert the code for the desired cable length into the catalog number (010 = 1.0 m, 025 = 2.5 m, and 050 = 5.0 m). Example: **Catalog Number 1492-CABLE050TBNH** is for a 5.0 m cable with a pre-wired Catalog Number 1756-TBNH RTB on one end.

❸ Discrete I/O ready cables should not be used with PLC analog I/O modules as cable shield and drain wires are not provided.

Selection Tables, Continued

Bulletin 1756 ControlLogix AIFMs and Cables

Bulletin 1756 Analog I/O Module ❶ ❷

Description of AIFM	Catalog Number for Wiring System Module with Fixed Terminal Block	Catalog Number for Wiring System Module with Removable Terminal Block Socket Assembly (order plugs separately	I/O Module Catalog Number 1756																													Cat. No. 1757
			HSC (24V Diff.)	HCS (5V Diff.)	IF4FXOF2F (Cur In & Out	IF4FXOF2F (Volt In & Out	IF4FXOF2F (Cur In & Volt Out	IF6I (Current)	IF6I (Voltage)	IF6CIS	IF8 (Sgl-End Volt)	IF8 (Sgl-End Current)	IF8 (Diff Voltage)	IF8 (Diff Current)	IF8H (Voltage)	IF8H (Current/Hart)	IF16 (Sgl-End Volt)	IF16 (Sgl-End Current)	IF16 (Diff Voltage)	IF16 (Diff Current)	IR6I	IT6I	IT6I2	OF4 (Voltage)	OF4 (Current)	OF6CI	OF6VI	OF8 (Voltage)	OF8 (Current)	OH8H (Voltage)	OF8H (Current/Hart)	PIM
Feed-through																																
4-channel input, output or 2-in/2-out combination with 3 terminals/channel	1492-AIFM4-3	1492-RAIFM4-3❸	—	—	—	—	—	—	—	—	—	—	—	—	—	—	—	—	—	—	—	—	—	VA	VB	—	—	—	—	—	—	—
6-channel isolated with 3…4 terminals/channel	1492-AIFM6S-3	1492-RAIFM6S-3❹	—	—	ZA	ZB	ZC	X	Y	Z	—	—	—	—	—	—	—	—	—	—	Z	—	—	—	—	Y	Y		—	—	—	—
8- or 16-channel input or output with 3 terminals/channel	1492-AIFM8-3	1492-RAIFM8-3❺	—	—	—	—	—	—	—	—	TA	TB	TC	TD	UC	UD	UA	UB	UC	UD	—	—	—	—	—	—	—	WA	WB	WA	WB	—
Thermocouple																																
6-channel with 3 terminals/channel	1492-AIFM6TC-3	—	—	—	—	—	—	—	—	—	—	—	—	—	—	—	—	—	—	—	—	Y	YT	—	—	—	—	—	—	—	—	—
High Speed Counter/Encoder																																
2-channel counter input/4 outputs	1492-AIFMCE4	—	XA	XB	—	—	—	—	—	—	—	—	—	—	—	—	—	—	—	—	—	—	—	—	—	—	—	—	—	—	—	—
Fusible High-Speed Counter/Encoder																																
2-channel fused counter input/4 fused outputs	1492-AIFMCE4-F	—	XA	XB	—	—	—	—	—	—	—	—	—	—	—	—	—	—	—	—	—	—	—	—	—	—	—	—	—	—	—	—
Fusible Analog																																
8-channel input with 24V DC blown fuse indicators, 5 terminals/channel	1492-AIFM8-F-5	—	—	—	ZA	ZB	ZC	—	—	—	TA	TB	TC	TD	UC	UD	—	—	UC	UD	—	—	—	—	—	—	—	—	—	—	—	—
16-channel input with 24V DC blown fuse indicators, 3 terminals/channel	1492-AIFM16-F-3	—	—	—	—	—	—	—	—	—	—	—	—	—	—	—	UA	UB	UC	UD	—	—	—	—	—	—	—	—	—	—	—	—
16-channel input with 24V DC blown fuse indicators, 5 terminals/channel	1492-AIFM16-F-5	—	—	—	—	—	—	—	—	—	—	—	—	—	—	—	UA	UB	UC	UD	—	—	—	—	—	—	—	—	—	—	—	—
8 input/ 2 output channels	1492-AIFMPI	—	—	—	—	—	—	—	—	—	—	—	—	—	—	—	—	—	—	—	—	—	—	—	—	—	—	—	—	—	—	M

❶ Some analog I/O modules can be operated in up to four modes (current/voltage, single-ended/differential) based on connections. In all cases, each channel is factory-configured for the same mode. However, you can field configure any channel for another mode. You made need to alter the terminal block wiring to match the application. Refer to the PLC installation manual

❷ Cables are available in standard lengths of 0.5 m 1.0 m, 2.5 m, and 5.0 m. To order, insert the code for the desired cable length into the catalog number 005 = 0.5 m (010 = 1.0 m, 025 = 2.5 m, and 050 = 5.0 m), and insert the letter in the box. Example: **Catalog Number 1492-ACABLE025TB** is for a 2.5 m cable, and the letters TB.

❸ Compatible Removable Terminal Block (RTB) plug; 1492-RTB8N (screw style terminals) or 1492-RTB8P (push-in style terminals). ORDER PLUGS SEPARATELY.

❹ Compatible Removable Terminal Block (RTB) plug; 1492-RTB12N (screw style terminals) or 1492-RTB12P (push-in style terminals). ORDER PLUGS SEPARATELY.

❺ Compatible Removable Terminal Block (RTB) plug; 1492-RTB16N (screw style terminals) or 1492-RTB16P (push-in style terminals). ORDER PLUGS SEPARATELY.

Selection Tables, Continued

Bulletin 1756 ControlLogix AIFMs and Cables, Continued

These **pre-wired cables** have a pre-wired RTB on one end to connect to the front of a Bulletin 1756 analog I/O module and a D-shell connector on the other end to plug into a 15- or 25-pin D-shell terminal AIFM. You must first select the AIFM from the preceding selection table.

Pre-Wired Cables for 1756 Analog I/O Modules

Cable Catalog Number	Standard Cable Lengths	Build-to-Order Available	AIFM Connector	Mating 1756 I/O Module Catalog Number
1492-ACABLE❶M	0.5, 1.0, 2.5, 5.0 m	Yes	25-pin D-shell	1757-PIM
1492-ACABLE❶X	0.5, 1.0, 2.5, 5.0 m	Yes	25-pin D-shell	1756-IF16 Current
1492-ACABLE❶Y	0.5, 1.0, 2.5, 5.0 m	Yes	25-pin D-shell	1756-IF16 Voltage, -IT6I, -OF6CI, -OF6VI
1492-ACABLE❶YT	0.5, 1.0, 2.5, 5.0 m	Yes	25-pin D-shell	1756-IT6I2
1492-ACABLE❶Z	0.5, 1.0, 2.5, 5.0 m	Yes	25-pin D-shell	1756-IR6I, -IF6CIS
1492-ACABLE❶TA	0.5, 1.0, 2.5, 5.0 m	Yes	25-pin D-shell	1756-IF8 Single-Ended Voltage
1492-ACABLE❶TB	0.5, 1.0, 2.5, 5.0 m	Yes	25-pin D-shell	1756-IF8 Single-Ended Current
1492-ACABLE❶TC	0.5, 1.0, 2.5, 5.0 m	Yes	25-pin D-shell	1756-IF8 Diff. Voltage
1492-ACABLE❶TD	0.5, 1.0, 2.5, 5.0 m	Yes	25-pin D-shell	1756-IF8 Diff. Current
1492-ACABLE❶UA	0.5, 1.0, 2.5, 5.0 m	Yes	25-pin D-shell	1756-IF16 Single-Ended Voltage
1492-ACABLE❶UB	0.5, 1.0, 2.5, 5.0 m	Yes	25-pin D-shell	1756-IF16 Single-Ended Current
1492-ACABLE❶UC	0.5, 1.0, 2.5, 5.0 m	Yes	25-pin D-shell	1756-IF16 Diff. Voltage, -IF8H (Voltage)
1492-ACABLE❶UD	0.5, 1.0, 2.5, 5.0 m	Yes	25-pin D-shell	1756-IF16 Diff. Current, IF8H (Current/Hart)
1492-ACABLE❶VA	0.5, 1.0, 2.5, 5.0 m	Yes	15-pin D-shell	1756-OF4 Voltage
1492-ACABLE❶VB	0.5, 1.0, 2.5, 5.0 m	Yes	15-pin D-shell	1756-OF4 Current
1492-ACABLE❶WA	0.5, 1.0, 2.5, 5.0 m	Yes	25-pin D-shell	1756-OF8 Voltage, -OF8H (Voltage)
1492-ACABLE❶WB	0.5, 1.0, 2.5, 5.0 m	Yes	25-pin D-shell	1756-OF8 Current, -OF8H (Current/Hart)
1492-ACABLE❶XA	0.5, 1.0, 2.5, 5.0 m	Yes	25-pin D-shell	1756-HSC (24V DC Diff.)
1492-ACABLE❶XB	0.5, 1.0, 2.5, 5.0 m	Yes	25-pin D-shell	1756-HSC (5V DC Diff.)
1492-ACABLE❶ZA	0.5, 1.0, 2.5, 5.0 m	Yes	25-pin D-shell	1756-IF4FXOF2F (Cur In & Out)
1492-ACABLE❶ZB	0.5, 1.0, 2.5, 5.0 m	Yes	25-pin D-shell	1756-IF4FXOF2F (Volt In & Out)
1492-ACABLE❶ZC	0.5, 1.0, 2.5, 5.0 m	Yes	25-pin D-shell	1756-IF4FXOF2F (Cur In & Volt Out)

❶ Cables are available in standard lengths of 0.5 m, 1.0 m, 2.5 m, and 5.0 m. To order, insert the code for the desired cable length into the catalog number (005 = 0.5 m, 010 = 1.0 m, 025 = 2.5 m, and 050 = 5.0 m). Example: **Catalog Number 1492-ACABLE005Y** is for a 0.5 m cable that could be used to connect a Catalog Number 1492-AIFM6TC-3 analog IFM to a Catalog Number 1756-IT6I I/O module.

Selection Tables, Continued

Using Bulletin 1762/1764 Selection Tables to Make Valid 1492 Wiring System Module Catalog Numbers

Follow these steps when using the selection tables to make valid catalog numbers:

1. Find the appropriate table based on the catalog numbers of the 1762/1764 controller.
2. Find the column for the 1762/1764 I/O.
3. Follow the column down to determine which Wiring System Modules are compatible with the I/O as indicated by letter and number (e.g. A62) code. If there is no letter/number code, the Wiring System Module is not compatible with the I/O module. NOTE: The letter/number codes designate the compatible 1492 cable for that 1762/1764 I/O and Wiring System Module combination.
4. Select the desired Wiring System Module.
5. Configure the cable catalog number using 1492-CAB❶. See footnote ❶ on pages 43 and 44.

MicroLogix 1200 Embedded 40 I/O Controllers to IFM Selection Tables

Bulletin 1762-L40x Compatible 40-Terminal 1492-IFMs

Description of 40-PIN IFM	Cat. No. for Wiring System Module with Fixed Terminal Block	Cat. No. for Wiring System Module with Removable Terminal Block Socket Assembly (order plugs separately	1762 Embedded I/O Controller					
			-L40AWA Inputs	-L40BWA Inputs	-L40BXB Inputs	-L40AWA Outputs	-L40BWA Outputs	-L40BXB Outputs
Feed-through								
Standard 132V AC/DC Max.	1492-IFM40F❶	1492-RIFM40F❶❷	A62	A62	A62	B62	B62	B62
Extra terminals 132V AC/DC Max.	1492-IFM40F-2❶	1492-RIFM40F-2❶❷	A62	A62	A62	B62	B62	B62

❶ When using this IFM module with the base I/O of the 1762 controller, the current rating of the ouputs must be considered.

❷ Compatible Removable Terminal Block (RTB) plug; 1492-RTB20N (screw style terminlas) or 1492-RTB20P (push-in style terminals). ORDER PLUGS SEPARATELY.

These **pre-wired cables** have a pre-wired removable terminal block (RTB) on one end to connect to the front of the Bulletin 1762 controller embedded digital I/O and a connector on the other end to plug into a 40-terminal IFM. You must first select the IFM from the preceding selection table.

Pre-Wired Cables for 1762-L40x Embedded I/O Controllers

Cable Cat. No.	Standard Cable Lengths	Build-to-Order Available	No. of Conductors	Mating 1762-L40x Embedded I/O Controller
1492-CAB❶A62	0.5, 1.0, 2.5, 5.0	Yes	40	-L40AWA Inputs, -L40BWA Inputs, -L40BXB Inputs
1492-CAB❶B62	0.5, 1.0, 2.5, 5.0	Yes	40	-L40AWA Outputs, -L40BWA Outputs, -L40BXB Outputs

❶ Pre-wired cables are available in standard lengths of 0.5 m, 1.0 m, 2.5 m, and 5.0 m. To order, insert the code for the desired cable length into the catalog number (005 = 0.5 m, 010 = 1.0 m, 025 = 2.5 m, and 050 = 5.0 m). Example: **Catalog Number 1492-CAB005A62** is for a 0.5 m cable that could be used to connect a Catalog Number 1492-IFM40F to a Cat. No. 1762-L40AWA Input.

Selection Tables, Continued

The **I/O module-ready cables** have a pre-wired RTB on one end to plug onto the front of the Bulletin 1762 controller embedded I/O and 25 or 40 individually colored conductors on the other end. These cables provide the convenience of pre-wired connections at the controller embedded I/O end, while still allowing the flexibility to field-wire to standard terminal blocks of your choice.

I/O Ready Cables for 1762-L40x Embedded I/O Controllers

Cable Cat. No.	Standard Cable Lengths	Build-to-Order Available	No. of Conductors❸	Mating 1762-L40x Embedded I/O Controller
1492-CAB❷T62	1.0, 2.5, 5.0 m	Yes	25	-L40AWA Outputs, -L40BWA Outputs, -L40BXB Outputs
1492-CAB❷X62	1.0, 2.5, 5.0 m	Yes	40	-L40AWA Inputs, -L40BWA Inputs, -L40BXB Inputs

❷ I/O ready cables are available in standard lengths or 1.0 m, 2.5 m, and 5.0 m. To order, insert the code for the desired cable length into the catalog number (010 = 1.0 m, 025 = 2.5 m, and 050 = 5.0 m) Example: **Catalog Number 1492-CABLE050RTBR** is for a 5.0 m cable with a pre-wired Catalog Number 1746-RT25R RTB on one end.

❸ 1492-CAB❶T62 uses 18AWG wire and 1492-CAB❶X62 uses 22AWG wire.

MicroLogix 1500 Base Unit I/O to IFM Selection Tables

Bulletin 1764, Base Units I/O and Compatible 20-Terminal 1492-IFMs

Description of 20-PIN IFM	Catalog Number for Wiring System Module with Fixed Terminal Block	Catalog Number for Wiring System Module with Removable Terminal Block Socket Assembly (order plugs separately	1764 Base Unit I/O					
			AWA Inputs	BWA Inputs	BXB Inputs	AWA Outputs	BWA Outputs	BXB Outputs
Feed-through								
Standard 264Vac/dc Max.	1492-IFM20F❶	1492-RIFM20F❶❷	A64	A64	B64	C64	C64	F64
Narrow standard 132Vac/dc Max.	1492-IFM20FN❶	1492-RIFM20FN❶❸	A64	A64	B64	C64	C64	F64
With Extra terminals (2 per I/O) 264Vac/dc Max.	1492-IFM20F-2❶	1492-RIFM20F02❶❷	A64	A64	B64	C64	C64	F64

❶ When using this IFM module with the base I/O of the 1762 controller, the current rating of the ouputs must be considered. Refer to appendix A

❷ Compatible Removablae Terminal Block (RTB) 1492-RTB20N (screw style terminal) or 1492-RTB20P (push-in style terminal, available March 2006). ORDER PLUGS SEPARATELY.

❸ Compatible Removable Terminal Block (RTB) plug; 1492-RTB10N (screw style terminals) or 1492-RTB10P (push-in style terminals, available March 2006. ORDER PLUGS SEPARATELY.

These **pre-wired cables** have a pre-wired removable terminal block (RTB) on one end to connect to the front of the Bulletin 1764 base unit digital I/O and a connector on the other end to plug into a 20-terminal IFM. You must first select the IFM from the preceding selection table.

Pre-Wired Cables for 1764 Base I/O

I/O Ready Cable Cat. No.	Standard Cable Lengths	Build-to-Order Available	No. of Conductors	Mating 1764 Base Unit I/O
1492-CAB❶A64	0.5, 1.0, 2.5, 5.0	Yes	20	AWA Inputs, BWA Inputs
1492-CAB❶B64	0.5, 1.0, 2.5, 5.0	Yes	20	BXB Inputs
1492-CAB❶C64	0.5, 1.0, 2.5, 5.0	Yes	20	AWA Outputs, BWA Outputs
1492-CAB❶F64	0.5, 1.0, 2.5, 5.0	Yes	20	BXB Output

❶ Pre-wired cables are available in standard lengths of 0.5 m, 1.0 m, 2.5 m, and 5.0 m. To order, insert the code for the desired cable length into the catalog number (005 = 0.5 m, 010 = 1.0 m, 025 = 2.5 m, and 050 = 5.0 m). Example: **Catalog Number 1492-CAB005A64** is for a 0.5 m cable that could be used to connect a Catalog Number 1492-IFM20F to a Cat. No. 1764-AWA Input.

Selection Tables, Continued

The I/O module-ready cables have a pre-wired RTB on one end to plug onto the front of the Bulletin 1764 base unit I/O and 20 individually colored conductors on the other end. These cables provide the convenience of pre-wired connections at the base unit I/O end, while still allowing the flexibility to field-wire to standard terminal blocks of your choice.

I/O Ready Cables for 1764 Base I/O

Cable Cat. No.	Standard Cable Lengths	Build-to-Order Available	No. of Conductors	Mating 1764 Base Unit I/O
1492-CAB❷T64	1.0, 2.5, 5.0 m	Yes	20❸	AWA Outputs, BWA Outputs
1492-CAB❷U64	1.0, 2.5, 5.0 m	Yes	20❸	BXB Outputs
1492-CAB❷W64	1.0, 2.5, 5.0	Yes	20❹	AWA Inputs, BWA Inputs
1492-CAB❷X64	1.0, 2.5, 5.0	Yes	20❹	BXB Inputs

❷ I/O ready cables are available in standard lengths or 1.0 m, 2.5 m, and 5.0 m. To order, insert the code for the desired cable length into the catalog number (010 = 1.0 m, 025 = 2.5 m, and 050 = 5.0 m) Example: **Catalog Number 1492-CABLE050RTBR** is for a 5.0 m cable with a pre-wired Catalog Number 1746-RT25R RTB on one end.
❸ Uses #18 AWG wire.
❹ Uses #22 AWG wire.

Using Bulletin 1769 Selection Tables to Make Valid 1492 Wiring System Module Catalog Numbers

Follow these steps when using the selection tables to make valid catalog numbers:

1. Find the appropriate table based on the catalog number of the 1769 I/O module.
2. Find the column in the selected table for the 1769 I/O module.
3. Follow the column down to determine which Wiring System Modules are compatible with the I/O module as indicated by letter code. If there is no letter code, the Wiring System Module is not compatible with the I/O module. NOTE: The letter codes designate the compatible 1492 cable for that 1769 I/O and Wiring System Module combination.
4. Select the desired Wiring System Module.
5. Configure the cable catalog number using 1492-CAB❶ (for digital cables) or 1492-ACAB❶ (for analog cables). See footnote ❶ on pages 50 and 53.

Bulletin 1769 Compact I/O for CompactLogix and MicroLogix 1500 IFMs and Cables

Bulletin 1769 Digital 8 and 16-Point I/O Modules ❸

Description of 20-PIN IFM	Cat. No. for Wiring System Module with Fixed Terminal Block	Cat. No. for Wiring System Module with Removable Terminal Block Socket Assembly (order plugs separately	I/O Module Catalog Number 1769-…												
			IA8I	IA16	IQ16	IQ16F	IM12	OA8	OA16	OB8	OB16	OV16	OW8	OW8I	OW16
Feed-through															
Standard 264V AC/DC Max.	1492-IFM20F	1492-RIFM20F❼	F69	A69	B69	B69	G69	C69	M69	L69	E69	E69	C69	D69	M69
Narrow standard 132V AC/DC Max.	1492-IFM20FN	1492-RIFM20FN❽	F69	A69	B69	B69	—	C69	M69	L69	E69	E69	C69	—	M69
Extra terminals (2 per I/O) 264V AC/DC Max.	1492-IFM20F-2	1492-RIFM20F-2❼	—	A69	B69	B69	G69	C69	M69	L69	E69	E69	C69	—	M69
3-wire sensor type input devices 132V AC/DC Max.	1492-IFM20F-3	—	—	A69	B69	B69	—	—	—	—	—	—	—	—	—

Note: Footnotes are on the following page.

Bulletin 1769 Digital 8 and 16-Point I/O Modules (Continued)❸

Description of 20-PIN IFM	Cat. No. for Wiring System Module with Fixed Terminal Block	Cat. No. for Wiring System Module with Removable Terminal Block Socket Assembly (order plugs separately	I/O Module Catalog Number 1769-…												
			IA8I	IA16	IQ16	IQ16F	IM12	OA8	OA16	OB8	OB16	OV16	OW8	OW8I	OW16
LED Indicating															
Standard with 24V AC/DC LEDs	1492-IFM20D24	—	—	—	B69	B69	—	—	—	—	E69	E69	—	—	M69
Narrow standard with 24V AC/DC LEDs	1492-IFM20D24N	—	—	—	B69	B69	—	—	—	—	E69	—	—	—	H69
Standard with 120V AC/DC LEDs	1492-IFM20D120 ❹	—	—	A69	—	—	—	—	M69	—	—	—	—	—	M69
Narrow standard with 120V AC LEDs	1492-IFM20D120N	—	—	A69	—	—	—	—	H69	—	—	—	—	—	H69
24V AC/DC LEDs and extra terminals for outputs	1492-IFM20D24-2	—	—	—	—	—	—	—	—	—	E69	E69	—	—	M69
24V AC/DC LEDs and extra terminals for inputs	1492-IFM20D24A-2	—	—	—	B69	B69	—	—	—	—	—	—	—	—	—
120V AC LEDs and extra terminals for outputs	1492-IFM20D120-2	—	—	—	—	—	—	—	M69	—	—	—	—	—	M69
120V AC LEDs and extra terminals for inputs	1492-IFM20D120A-2	—	—	A69	—	—	—	—	—	—	—	—	—	—	—
3-wire sensor with 24V AC/DC LEDs	1492-IFM20D24-3	—	—	—	B69	B69	—	—	—	—	—	—	—	—	—
8 Individually isolated with 24/48V AC/DC LEDs and 4 terminals/output	1492-IFM20DS24-4	—	—	—	—	—	—	—	—	—	—	—	C69	D69	—
8 Individually isolated with 120V AC LEDs and 4 terminals/output	1492-IFM20DS120-4	—	—	—	—	—	—	C69	—	—	—	—	C69	D69	—
240V AC LEDs and extra terminals for outputs	1492-IFM20D240-2	—	—	—	—	—	—	—	M69	—	—	—	—	—	M69
240V AC LEDs and extra terminals for inputs	1492-IFM20D240A-2	—	—	—	—	—	G69	—	—	—	—	—	—	—	—
Fusible															
120V AC/DC with extra terminals for outputs	1492-IFM20F-F-2	14792-RIFM20F-F-2❼	—	—	—	—	—	—	M69	—	E69	E69	—	—	M69
Extra terminals with 24V AC/DC blown fuse LED indicators	1492-IFM20F-F24-2	1492-IFM20F-F24-2❼	—	—	—	—	—	—	—	—	E69	E69	—	—	M69
Extra terminals with 120V AC/DC blown fuse LED indicators	1492-IFM20F-F120-2	1492-RIFM20F-F120-2❼	—	—	—	—	—	—	M69	—	—	—	—	—	M69
Extra terminals with 240V AC/DC blown fuse LED indicators	1492-IFM20F-F240-2	—	—	—	—	—	—	—	—	—	—	—	—	—	—
Extra terminals with 24V AC/DC blown fuse LED indicators	1492-IFM20F-F24A-2	1492-RIFM20F-F24A-2❼	—	—	B69 ❶	B69 ❶	—	—	—	—	—	E69	—	—	—
Extra terminals with 120V AC/DC blown fuse LED indicators	1492-IFM20F-F120A-2	1492-RIFM20F-F120A02❼	—	A69	—	—	—	—	—	—	—	—	—	—	—
8 Individually isolated 120V AC/DC with extra terminals for outputs	1492-IFM20F-FS-2	—	—	—	—	—	—	C69	—	—	—	—	C69	D69	—
8 Individually isolated with extra terminals output, and 24V AC/DC blown fuse indicators	1492-IFM20F-FS24-2	—	—	—	—	—	—	—	—	—	—	—	C69	D69	—
Two 4-point isolated groups with four terminals/input and 24V AC/DC blown fuse LED indicators	1492-IFM20F-FS24A-4	—	—	—	—	—	—	—	—	—	—	—	—	—	—
8 Individually isolated with extra terminals output, and 120V AC/DC blown fuse LED indicators	1492-IFM20F-FS120-2	—	—	—	—	—	—	C69	—	—	—	—	C69	D69	—
8 Individually isolated with four terminals/output and 120V AC/DC blown fuse LED indicators	1492-IFM20F-FS120-4	—	—	—	—	—	—	C69	—	—	—	—	C69	D69	—
Two 4-point isolated groups with four terminals/input and 120V AC/DC blown fuse indicators	1492-IFM20F-FS120A-4	—	—	—	—	—	—	—	—	—	—	—	—	—	—
8 Individually isolated with four terminals/output and 240V AC/DC blown fuse LED indicators	1492-IFM20F-FS240-4	—	—	—	—	—	—	—	—	—	—	—	—	D69	—
Relay Master (LED Indicating) ❺❻															
20-pin master with eight (8) 24V DC relays	1492-XIM2024-8R❾	—	—	—	—	—	—	—	—	—	E69	—	—	—	—
20-pin master with eight (8) 120V AC relays	1492-XIM20120-8R❶❶	—	—	—	—	—	—	—	H69	—	—	—	—	—	—
20-pin master with sixteen (16) 24V DC relays with fusing	1492-XIM2024-16R	—	—	—	—	—	—	—	—	—	E69	—	—	—	—
20-pin master with sixteen (16) 24V DC relays with fusing	1492-XIM2024-16RF	—	—	—	—	—	—	—	—	—	E69	—	—	—	—
20-pin master with sixteen (16) 120V AC relays	1492-XIM20120-16R	—	—	—	—	—	—	—	H69	—	—	—	—	—	—
20-pin master with sixteen (16) 120V AC relays with fusing	1492-XIM20120-16RF	—	—	—	—	—	—	—	H69	—	—	—	—	—	—

Bulletin 1769 Digital 8 and 16-Point I/O Modules (Continued)❸

Description of 20-PIN IFM	Cat. No. for Wiring System Module with Fixed Terminal Block	Cat. No. for Wiring System Module with Removable Terminal Block Socket Assembly (order plugs separately	I/O Module Catalog Number 1769-…												
			IA8I	IA16	IQ16	IQ16F	IM12	OA8	OA16	OB8	OB16	OV16	OW8	OW8I	OW16
LED Indicating															
Standard with 24V AC/DC LEDs	1492-IFM20D24	—	—	—	B69	B69	—	—	—	—	E69	E69	—	—	M69
Narrow standard with 24V AC/DC LEDs	1492-IFM20D24N	—	—	—	B69	B69	—	—	—	—	E69	—	—	—	H69
Standard with 120V AC/DC LEDs	1492-IFM20D120 ❹	—	—	A69	—	—	—	—	M69	—	—	—	—	—	M69
Narrow standard with 120V AC LEDs	1492-IFM20D120N	—	—	A69	—	—	—	—	H69	—	—	—	—	—	H69
24V AC/DC LEDs and extra terminals for outputs	1492-IFM20D24-2	—	—	—	—	—	—	—	—	—	E69	E69	—	—	M69
24V AC/DC LEDs and extra terminals for inputs	1492-IFM20D24A-2	—	—	—	B69	B69	—	—	—	—	—	—	—	—	—
120V AC LEDs and extra terminals for outputs	1492-IFM20D120-2	—	—	—	—	—	—	—	M69	—	—	—	—	—	M69
120V AC LEDs and extra terminals for inputs	1492-IFM20D120A-2	—	—	A69	—	—	—	—	—	—	—	—	—	—	—
3-wire sensor with 24V AC/DC LEDs	1492-IFM20D24-3	—	—	—	B69	B69	—	—	—	—	—	—	—	—	—
8 Individually isolated with 24/48V AC/DC LEDs and 4 terminals/output	1492-IFM20DS24-4	—	—	—	—	—	—	—	—	—	—	—	C69	D69	—
8 Individually isolated with 120V AC LEDs and 4 terminals/output	1492-IFM20DS120-4	—	—	—	—	—	—	C69	—	—	—	—	C69	D69	—
240V AC LEDs and extra terminals for outputs	1492-IFM20D240-2	—	—	—	—	—	—	—	M69	—	—	—	—	—	M69
240V AC LEDs and extra terminals for inputs	1492-IFM20D240A-2	—	—	—	—	—	G69	—	—	—	—	—	—	—	—
Fusible															
120V AC/DC with extra terminals for outputs	1492-IFM20F-F-2	14792-RIFM20F-F-2❼	—	—	—	—	—	—	M69	—	E69	E69	—	—	M69
Extra terminals with 24V AC/DC blown fuse LED indicators	1492-IFM20F-F24-2	1492-IFM20F-F24-2❼	—	—	—	—	—	—	—	—	E69	E69	—	—	M69
Extra terminals with 120V AC/DC blown fuse LED indicators	1492-IFM20F-F120-2	1492-RIFM20F-F120-2❼	—	—	—	—	—	—	M69	—	—	—	—	—	M69
Extra terminals with 240V AC/DC blown fuse LED indicators	1492-IFM20F-F240-2	—	—	—	—	—	—	—	—	—	—	—	—	—	—
Extra terminals with 24V AC/DC blown fuse LED indicators	1492-IFM20F-F24A-2	1492-RIFM20F-F24A-2❼	—	—	B69 ❶	B69 ❶	—	—	—	—	—	E69	—	—	—
Extra terminals with 120V AC/DC blown fuse LED indicators	1492-IFM20F-F120A-2	1492-RIFM20F-F120A02❼	—	A69	—	—	—	—	—	—	—	—	—	—	—
8 Individually isolated 120V AC/DC with extra terminals for outputs	1492-IFM20F-FS-2	—	—	—	—	—	—	C69	—	—	—	—	C69	D69	—
8 Individually isolated with extra terminals output, and 24V AC/DC blown fuse indicators	1492-IFM20F-FS24-2	—	—	—	—	—	—	—	—	—	—	—	C69	D69	—
Two 4-point isolated groups with four terminals/input and 24V AC/DC blown fuse LED indicators	1492-IFM20F-FS24A-4	—	—	—	—	—	—	—	—	—	—	—	—	—	—
8 Individually isolated with extra terminals output, and 120V AC/DC blown fuse LED indicators	1492-IFM20F-FS120-2	—	—	—	—	—	—	C69	—	—	—	—	C69	D69	—
8 Individually isolated with four terminals/output and 120V AC/DC blown fuse LED indicators	1492-IFM20F-FS120-4	—	—	—	—	—	—	C69	—	—	—	—	C69	D69	—
Two 4-point isolated groups with four terminals/input and 120V AC/DC blown fuse indicators	1492-IFM20F-FS120A-4	—	—	—	—	—	—	—	—	—	—	—	—	—	—
8 Individually isolated with four terminals/output and 240V AC/DC blown fuse LED indicators	1492-IFM20F-FS240-4	—	—	—	—	—	—	—	—	—	—	—	—	D69	—
Relay Master (LED Indicating) ❺❻															
20-pin master with eight (8) 24V DC relays	1492-XIM2024-8R❾	—	—	—	—	—	—	—	—	—	E69	—	—	—	—
20-pin master with eight (8) 120V AC relays	1492-XIM20120-8R❶❶	—	—	—	—	—	—	—	H69	—	—	—	—	—	—
20-pin master with sixteen (16) 24V DC relays with fusing	1492-XIM2024-16R	—	—	—	—	—	—	—	—	—	E69	—	—	—	—
20-pin master with sixteen (16) 24V DC relays with fusing	1492-XIM2024-16RF	—	—	—	—	—	—	—	—	—	E69	—	—	—	—
20-pin master with sixteen (16) 120V AC relays	1492-XIM20120-16R	—	—	—	—	—	—	—	H69	—	—	—	—	—	—
20-pin master with sixteen (16) 120V AC relays with fusing	1492-XIM20120-16RF	—	—	—	—	—	—	—	H69	—	—	—	—	—	—

Note: Footnotes are on the following page.

Bulletin 1769 Digital 8 and 16-Point I/O Modules (Continued)❸

Description of 20-PIN IFM	Cat. No. for Wiring System Module with Fixed Terminal Block	Cat. No. for Wiring System Module with Removable Terminal Block Socket Assembly (order plugs separately	I/O Module Catalog Number 1769-…												
			IA8I	IA16	IQ16	IQ16F	IM12	OA8	OA16	OB8	OB16	OV16	OW8	OW8I	OW16
Relay Expander (LED Indicating) ❺❻															
Expander with eight (8) 24V DC relays	1492-XIM24-8R	1492-RXIM24-8R*	—	—	—	—	—	—	—	—	❷	—	—	—	—
Expander with eight (8) 120V AC relays	1492-XIM120-8R	—	—	—	—	—	—	—	—	—	—	—	—	—	—
Fusible Expander		—	—	—	—	—	—	—	—	—	—	—	—	—	—
8-channel expander with 24V DC blown fuse indicators	1492-XIMF-F24-2	—	—	—	—	—	—	—	—	—	❷	—	—	—	—
8-channel expander with 120V AC blown fuse indicators	1492-XIMF-F120-2	—	—	—	—	—	—	—	❷	—	—	—	—	—	—
Feed-through Expander															
Expander with eight (8) feed-through channels 132V AC/DC max.	1492-XIMF-2	—	—	—	—	—	—	—	❷	❷	❷	—	—	—	—

❶ In the input module's sink mode only.
❷ One expander module is connected to a master to provide a total of 16 outputs. An extender cable is included with each expander to connect it to the master.
❸ Cables are available in standard lengths of 0.5 m 1.0 m, 2.5 m, and 5.0 m. To order, insert the code for the desired cable length into the catalog number 005 = 0.5 m (010 = 1.0 m, 025 = 2.5 m, and 050 = 5.0 m), and insert the letter in the box. Example: **Catalog Number 1492-CABLE050A** is for a 5.0 m cable, and the letter A.
❹ This IFM is not recommended for use with PLC I/O modules that have an off-state leakage current exceeding 0.5 mA. Use a 1492-IFM20D120N or 1492-IFM20D120A-2 for inputs. Use 1492-IFM20D120-2 for outputs.
❺ The voltage rating is relay control/coil voltage. For relay contact ratings, refer to page 192.
❻ The LED indicates the PLC output status.
❼ Compatible Removable Terminal Block (RTB) plug; 1492-RTB20N (screw style terminals) or 1492-RTB20P (push-in style terminals). ORDER PLUGS SEPARATELY.
❽ Compatible Removable Terminal Block (RTB) plug; 1492-RTB10N (screw style terminals) or 1492-RTB10P (push-in style terminals). ORDER PLUGS SEPARATELY.
❾ Expandable to 16 using XIM24-8R or XIMF-24-2.
❿ Expandable to 16 using XIM120-8R or XIMF-24-2.
✱ Compatible Removable Terminal Block (RTB) plug; 1492-RTB12N (screw style terminals) or 1492-RTB12P (push-in style terminals). ORDER PLUGS SEPARATELY.

Bulletin 1769 Compact I/O for CompactLogix and MicroLogix 1500 IFMs and Cables, Continued

Bulletin 1769 Digital 32-Point I/O Modules ❶

Description of 40-PIN IFM	Cat. No. for Wiring System Module with Fixed Terminal Block	Cat. No. for Wiring System Module with Removable Terminal Block Socket Assembly (order plugs separately	I/O Module Catalog Number 1769-…				
			IQ32	IQ32T	OB32	OB32T	OV32T
Feed-through							
Standard 132V AC/DC Max.	1492-IFM40F	1492-RIFM40F❻	J69	H	K69	H	H
Extra terminals (2 per I/O) 132V AC/DC Max.	1492-IFM40F-2	1492-RIFM40F-2❻	J69	H	K69	H	H
3-wire sensor type input devices 60V AC/DC Max.	1492-IFM40F-3	—	J69	H	—	—	—
LED Indicating							
Standard with 24V AC/DC LEDs	1492-IFM40D24	1492-RIFM40D24❻	J69	H	K69	H	H
24V AC/DC LEDs and extra terminals for outputs	1492-IFM40D24-2	—	—	—	K69	H	H
24V AC/DC LEDs and extra terminals for inputs	1492-IFM40D24A-2	1492-RIFM40D24A-2❻	J69	H	—	—	—
120V AC LEDs and extra terminals for outputs	1492-IFM40D120-2	—	—	—	—	—	—
120V AC LEDs and extra terminals for inputs	1492-IFM40D120A-2	—	—	—	—	—	—
3-wire sensor with 24V AC/DC LEDs	1492-IFM40D24-3	—	J69	H	—	—	—
16 Individually isolated with 24/48V AC/DC LEDs and 4 terminals/output	1492-IFM40DS24-4	—	—	—	—	—	—
16 Individually isolated with 24V AC/DC LEDs and 4 terminals/input	1492-IFM40DS24A-4	—	—	—	—	—	—
16 Individually isolated with 120V AC LEDs and 4 terminals/output	1492-IFM40DS120-4	—	—	—	—	—	—
16 Individually isolated with 120V AC LEDs and 4 terminals/input	1492-IFM40DS120A-4	—	—	—	—	—	—
16 Individually isolated with 240V AC LEDs and 4 terminals/input	1492-IFM40DS240A-4	—	—	—	—	—	—
Fusible							
120V AC/DC with extra terminals for outputs	1492-IFM40F-F-2	—	—	—	K69	H	H
Extra terminals with 24V AC/DC blown fuse indicators for outputs	1492-IFM40F-F24-2	1492-RIFM40F-F24-2❻	—	—	K69	H	H
Extra terminals with 120V AC/DC blown fuse indicators	1492-IFM40F-F120-2	—	—	—	—	—	—
16 Individually isolated with extra terminals for 120V AC/DC outputs	1492-IFM40F-FS-2	—	—	—	—	—	—
16 Individually isolated with extra terminals and 24V AC/DC blown fuse indicators	1492-IFM40F-FS24-2	—	—	—	—	—	—
16 Individually isolated with 24V AC/DC blown fuse indicators and 4 terminals/output	1492-IFM40F-FS24-4	—	—	—	—	—	—
16 Individually isolated 240V AC/DC with 4 terminals/output	1492-IFM40F-FS-4	—	—	—	—	—	—
16 Individually isolated with extra terminals and 120V blown fuse indicators	1492-IFM40F-FS120-2	1492-RIFM40F-FS120-2❻	—	—	—	—	—
16 Individually isolated with 120V AC/DC blown fuse indicators and 4 terminals/output	1492-IFM40F-FS120-4	1492-RIFM-FS120-4❼	—	—	—	—	—
16 Individually isolated with 240V AC/DC blown fuse indicators and 4 terminals/output	1492-IFM40F-FS240-4	—	—	—	—	—	—
16 Individually isolated with 24V AC/DC blown fuse indicators and 4 terminals/input	1492-IFM40F-FS24A-4	—	—	—	—	—	—
16 Individually isolated 120V AC/DC with 4 terminals/input	1492-IFM40F-FSA-4	—	—	—	—	—	—
16 Individually isolated with 120V AC/DC blown fuse indicators and 4 terminals/input	1492-IFM40F-FS120A-4	1492-RIFM40F-FS120A-4❼	—	—	—	—	—
16 Individually isolated with 240V AC/DC blown fuse indicator and 4 terminals/input	1492-IFM40F-FS240A-4	—	—	—	—	—	—
Relay Master (LED Indicating) ❹❺							
40-pin master with eight (8) 24V DC relays	1492-XIM4024-8R	—	—	—	K69	H	—
40-pin master with sixteen (16) 24V DC relays	1492-XIM4024-16R	1492-RXIM4024-16R❽	—	—	K69	H	—

Note: Footnotes are on the following page.

Bulletin 1769 Digital 32-Point I/O Modules (Continued)❶

Description of 40-PIN IFM	Cat. No. for Wiring System Module with Fixed Terminal Block	Cat. No. for Wiring System Module with Removable Terminal Block Socket Assembly (order plugs separately	I/O Module Catalog Number 1769-…				
			IQ32	IQ32T	OB32	OB32T	OV32T
40-pin master with sixteen (16) 24V DC relays with fusing	1492-XIM4024-16RF	—	—	—	K69	H	—
Relay Expander (LED Indicating) ❹❺							
Expander with eight (8) 24V DC relays	1492-XIM24-8R	1492-RXIM24-8R❾	—	—	❷	❷	—
Expander with eight (8) 120V AC relays	1492-XIM120-8R	—	—	—	—	—	—
Fusible Expander							
8-channel expander with 24V DC blown fuse indicators	1492-XIMF-F24-2	—	—	—	❷	❷	
8-channel expander with 120V AC blown fuse indicators	1492-XIMF-F120-2	—	—	—	—	—	—
Expander with sixteen (16) 24V DC relays with fusing	1492-XIM24-16RF	—	—	—	❸	❷	—
Feed-through Expander							
Expander with eight (8) feed-through channels	1492-XIMF-2	—	—	—	❷	❷	—

❶ Cables are available in standard lengths of 0.5, 1.0, 2.5, and 5.0 m. To order, insert the code for the desired cable length into the catalog number 005 = 0.5 m (010 = 1.0 m, 025 = 2.5 m, and 050 = 5.0 m), and insert the letter in the box. Example: **Catalog Number 1492-CABLE050A** is for a 5.0 m cable, and the letter A.
❷ Can have 2 or 3 expander modules depending on master used (32 pts. or less). Extender cable is provided.
❸ One 1492-XIM24-16RF is to be used with one 1492-XIM4024-16R or 1492-XIM4024-16RF master (32 pts. max.).
❹ The voltage rating is relay control/coil voltage. For relay contact ratings, refer to page 192.
❺ The LED indicates the PLC output status.
❻ Compatible Removable Terminal Block (RTB) plug; 1492-RTB20N (screw style terminals) or 1492-RTB20P (push-in style terminals). ORDER PLUGS SEPARATELY.
❼ Compatible Removable Terminal Block (RTB) plug; 1492-RTB17N (screw style terminals) or 1492-RTB17P (push-in style terminals). ORDER PLUGS SEPARATELY.
❽ Compatible Removable Terminal Block (RTB) plug; 1492-RTB14N (screw style terminals) or 1492-RTB14P (push-in style terminals). ORDER PLUGS SEPARATELY.
❾ Compatible Removable Terminal Block (RTB) plug; 1492-RTB12N (screw style terminals) or 1492-RTB12P (push-in style terminals). ORDER PLUGS SEPARATELY.

Bulletin 1769 Compact I/O for CompactLogix and MicroLogix 1500 IFMs and Cables, Continued

These **pre-wired cables** have a pre-wired RTB on one end to connect to the front of a Bulletin 1769 digital I/O module and a connector on the other end to plug into a 20- or 40-terminal IFM/XIM. You must first select the IFM/XIM from the preceding selection table.

Pre-Wired Cables for Bulletin 1769 Digital I/O Modules

Cable Cat. No.	Standard Cable Lengths	Build-to-Order Available	No. of Conductors	Mating 1769 I/O Module Catalog Number
1492-CAB❶A69	0.5, 1.0, 2.5, 5.0 m	Yes	20	1769-IA16
1492-CAB❶B69	0.5, 1.0, 2.5, 5.0 m	Yes	20	1769-IQ16
1492-CAB❶C69	0.5, 1.0, 2.5, 5.0 m	Yes	20	1769-OA8, -OW8
1492-CAB❶D69	0.5, 1.0, 2.5, 5.0 m	Yes	20	1769-OW8I
1492-CAB❶E69	0.5, 1.0, 2.5, 5.0 m	Yes	20	1769-OB16, -OV16
1492-CAB❶F69	0.5, 1.0, 2.5, 5.0 m	Yes	20	1769-IA8I
1492-CAB❶G69	0.5, 1.0, 2.5, 5.0 m	Yes	20	1769-IM12
1492-CAB❶H69	0.5, 1.0, 2.5, 5.0 m	Yes	20	1769-OA16, -OW16 (IFM modules with single common)
1492-CAB❶J69	0.5, 1.0, 2.5, 5.0 m	Yes	40	1769-IQ32
1492-CAB❶K69	0.5, 1.0, 2.5, 5.0 m	Yes	40	1769-OB32

Pre-Wired Cables for Bulletin 1769 Digital I/O Modules (Continued)

Cable Cat. No.	Standard Cable Lengths	Build-to-Order Available	No. of Conductors	Mating 1769 I/O Module Catalog Number
1492-CAB❶L69	0.5, 1.0, 2.5, 5.0 m	Yes	20	1769-OB8
1492-CAB❶M69	0.5, 1.0, 2.5, 5.0 m	Yes	20	1769-OA16, -OW16 (IFM modules with multiple commons)
1492-CABLE❶H	0.5, 1.0, 2.5, 5.0 m	Yes	40	1769-IQ32T, -OB32T, -OV32T

❶ Cables are available in standard lengths of 0.5 m, 1.0 m, 2.5 m, and 5.0 m. To order, insert the code for the desired cable length into the catalog number (005 = 0.5 m, 010 = 1.0 m, 025 = 2.5 m, and 050 = 5.0 m). Example: **Catalog Number 1492-CAB005E69** is for a 0.5 m cable that can be used to connect a Catalog Number 1492-IFM20D24N IFM to a Catalog Number 1769-OB16 I/O module.

The **I/O module-ready cables** have a pre-wired RTB on one end to plug onto the front of a Bulletin 1769 I/O module and 20 individually colored #18 AWG conductors on the other end. These cables provide the convenience of pre-wired connections at the I/O module end, while still allowing the flexibility to field-wire to standard terminal blocks of your choice.

I/O Module-Ready Cables for Bulletin 1769 Digital I/O Modules ❹

Cable Catalog Number	Standard Cable Lengths	Build-to-Order Available	No. of Conductors	Mating 1769 I/O Module Catalog Number
1492-CAB❸RTN10	1.0, 2.5, 5.0 m	Yes	12	1769-OA8, -OW8
1492-CAB❸RTN18	1.0, 2.5, 5.0 m	Yes	20	1769-IA8I, -IA16, -IQ16, -IQ16F, -OA16, -OB16, -OV16, -OW16, -OW8I, -IM12, -OB8
1492-CAB❸RTN32I	1.0, 2.5, 5.0 m	Yes	40 ❷	1769-IQ32
1492-CAB❸RTN32O	1.0, 2.5, 5.0 m	Yes	40 ❷	1769-OB32
1492-CABLE❸N3	1.0, 2.5, 5.0 m	Yes	40 ❷	1769-IQ32T, -OB32T, -OV32T

❷ 1492-CAB❸ RTN32I and 1492-CAB❸ RTN32O cables use 22 AWG wire.

❸ Cables are available in standard lengths of 1.0 m, 2.5 m, and 5.0 m. To order, insert the code for the desired cable length into the catalog number (010 = 1.0 m, 025 = 2.5 m, and 050 = 5.0 m). Example: **Catalog Number 1492-CAB050RTN10** is for a 5.0 m cable with a wired Catalog Number 1746-RTBN10 on one end.

❹ Discrete I/O ready cables should not be used with PLC analog I/O modules as a cable shield and drain wires are not provided.

Bulletin 1769 Compact I/O for CompactLogix and MicroLogix 1500 AIFMs and Cables

IFMs for Bulletin 1769 Analog I/O Modules❶

Description of AIFM	Catalog Number for Wiring System Module with Fixed Terminal Block	Catalog Number for Wiring System Module with Removable Terminal Block Socket Assembly (order plugs separately	I/O Module Catalog Number 1769-…																
			HSC (Differential)	IF4 (Single-Ended Voltage)	IF8 (Single-Ended Voltage)	IF4 (Single-Ended Current)	IF8 (Single-Ended Current)	IF4 (Differential Voltage)	IF8 (Differential Voltage)	IF4 (Differential Current)	IF8 (Differential Current)	IF4XOF2 or IF4FXOF2F (Cur In & Out)	IF4XOF2 or IF4FXOF2F (Volt In & Out)	IF4XOF2 or IF4FXOF2F (Cur In & Volt Out)	IR6	OF2 (Voltage)	OF8V (Voltage)	OF2 (Current)	OF8C (Current)
Feed-through																			
4-channel input, output or 2-in/2-out combination with 3 terminals/channel	1492-AIFM4-3	1492-RAIFM4-3❷	—	BA69	—	BB69	—	BC69	—	BD69	—	—	—	—	—	AA69	—	AB69	—
6-channel isolated with 3…4 terminals/channel	1492-AIFM6S-3	1492-RAIFM6S-3❸	—	—	—	—	—	—	—	—	—	CA69	CB69	CC69	C69	—	—	—	—
8- or 16-channel input or output with 3 terminals/channel	1492-AIFM8-3	1492-RAIFM8-3❹	—	—	EA69	—	EB69	—	EC69	—	ED69	—	—	—	—	—	D69	—	D69
Thermocouple																			
6-channel with 3 terminals/channel	1492-AIFM6TC-3	—	—	—	—	—	—	—	—	—	—	—	—	—	—	—	—	—	—
High-Speed Counter/Encoder																			
2-channel counter input/4 outputs	1492-AIFMCE4	—	HA69	—	—	—	—	—	—	—	—	—	—	—	—	—	—	—	—
Fusible High-Speed Counter/Encoder																			
2-channel fused counter input/4 fused outputs	1492-AIFMCE4-F	—	HA69	—	—	—	—	—	—	—	—	—	—	—	—	—	—	—	—
Fusible Analog																			
4-channel with 24V DC blown fuse indicators, test points, 5 terminals/input 3 terminals/output	1492-AIFM4I-F-5	—	—	BA69	—	BB69	—	BC69	—	BD69	—	—	—	—	—	—	—	—	—
2-channel input, 2-channel output with 24V DC blown fuse indicators, test points, 5 terminals/input, 3 terminals/output	1492-AIFM4C-F-5	—	—	—	—	—	—	—	—	—	—	—	—	—	—	—	—	—	—
8-channel input with 24V DC blown fuse indicators, 5 terminals/channel	1492-AIFM8-F-5	—	—	—	EA69	—	EB69	—	EC69	—	ED69	CA69	CB69	CC69	—	—	—	—	—
16-channel input with 24V DC blown fuse indicators, 3 terminals/channel	1492-AIFM16-F-3	—	—	—	—	—	—	—	—	—	—	—	—	—	—	—	—	—	—
16-channel input with 24V DC blown fuse indicators, 5 terminals/channel	1492-AIFM16-F-5	—	—	—	—	—	—	—	—	—	—	—	—	—	—	—	—	—	—
4-input/4-output channel with 8 fuses and 24V DC blown fuse indicators	1492-AIFMQS	—	—	—	—	—	—	—	—	—	—	—	—	—	—	—	—	—	—

❶ Cables are available in standard lengths of 0.5 m 1.0 m, 2.5 m, and 5.0 m. To order, insert the code for the desired cable length into the catalog number 005 = 0.5 m (010 = 1.0 m, 025 = 2.5 m, and 050 = 5.0 m), and insert the letter in the box. Example: **Catalog Number 1492-ACAB025BA69** is for a 2.5 m cable, and the letters BA.

❷ Compatible Removable Terminal Block (RTB) plug; 1492-RTB8N (screw style terminals) or 1492-RTB8P. ORDER PLUGS SEPARATELY.

❸ Compatible Removable Terminal Block (RTB) plug; 1492-RTB12N (screw style terminals) or 1492-RTB12P. ORDER PLUGS SEPARATELY.

❹ Compatible Removable Terminal Block (RTB) plug; 1492-RTB16N (screw style terminals) or 1492-RTB16P. ORDER PLUGS SEPARATELY.

These **pre-wired cables** have a pre-wired RTB on one end to connect to the front of a Bulletin 1769 analog I/O module and a connector on the other end to plug into a 15- or 25-pin D-shell terminal AIFM. You must first select the AIFM from the preceding selection table.

Pre-Wired Cables for Bulletin 1769 Analog I/O Modules

Cable Catalog Number	Standard Cable Lengths	Build-to-Order Available	AIFM Connector	Mating 1769 I/O Module Catalog Number
1492-ACAB❶AA69	0.5, 1.0, 2.5, 5.0 m	Yes	15-pin D-shell	1769-OF2 Voltage
1492-ACAB❶AB69	0.5, 1.0, 2.5, 5.0 m	Yes	15-pin D-shell	1769-OF2 Current
1492-ACAB❶BA69	0.5, 1.0, 2.5, 5.0 m	Yes	15-pin D-shell	1769-IF4 Single-Ended Voltage
1492-ACAB❶BB69	0.5, 1.0, 2.5, 5.0 m	Yes	15-pin D-shell	1769-IF4 Single-Ended Current
1492-ACAB❶BC69	0.5, 1.0, 2.5, 5.0 m	Yes	15-pin D-shell	1769-IF4 Differential Voltage
1492-ACAB❶BD69	0.5, 1.0, 2.5, 5.0 m	Yes	15-pin D-shell	1769-IF4 Differential Current
1492-ACAB❶C69	0.5, 1.0, 2.5, 5.0 m	Yes	25-pin D-shell	1769-IR6 Resist. Temperature Detector
1492-ACAB❶CA69	0.5, 1.0, 2.5, 5.0 m	Yes	25-pin D-shell	1769-IF4XOF2 or -IF4FXOF2F (Cur In & Out)
1492-ACAB❶CB69	0.5, 1.0, 2.5, 5.0 m	Yes	25-pin D-shell	1769-IF4XOF2 or -IF4FXOF2F (Volt In & Out)
1492-ACAB❶CC69	0.5, 1.0, 2.5, 5.0 m	Yes	25-pin D-shell	1769-IF4XOF2 or -IF4FXOF2F (Cur In & Volt Out)
1492-ACAB❶D69	0.5, 1.0, 2.5, 5.0 m	Yes	25-pin D-shell	1769-OF8C, 1769-OF8V
1492-ACAB❶EA69	0.5, 1.0, 2.5, 5.0 m	Yes	25-pin D-shell	1769-IF8 Single-Ended Voltage
1492-ACAB❶EB69	0.5, 1.0, 2.5, 5.0 m	Yes	25-pin D-shell	1769-IF8 Single-Ended Current
1492-ACAB❶EC69	0.5, 1.0, 2.5, 5.0 m	Yes	25-pin D-shell	1769-IF8 Differential Voltage
1492-ACAB❶ED69	0.5, 1.0, 2.5, 5.0 m	Yes	25-pin D-shell	1769-IF8 Differential Current
1492-ACAB❶HA69	0.5, 1.0, 2.5, 5.0 m	Yes	25-pin D-shell	1769-HSC Counter/Encoder (Differential)

❶ Cables are available in standard lengths of 0.5 m, 1.0 m, 2.5 m, and 5.0 m. To order, insert the code for the desired cable length into the catalog number (005 = 0.5 m, 010 = 1.0 m, 025 = 2.5 m, and 050 = 5.0 m). Example: **Catalog Number 1492-ACAB005❷** is for a 0.5 m cable.

Selection Tables

Using Bulletin 1794 Selection Tables to Make Valid 1492 Wiring System Module Catalog Numbers

Follow these steps when using the selection tables to make valid catalog numbers:

Note: I/O modules must use Flex D-shell base cat. nos. 1794-TB37DS or 1794-TB62DS.

1. Find the appropriate table based on the catalog numbers of the 1794 I/O module.
2. Find the column for the 1794 I/O module.
3. Follow the column down to determine which Wiring Systems Modules are compatible with the I/O module as indicated by letter code. If there is no letter code, the 1492 Wiring System Module is not compatible with the I/O module. NOTE: The letter codes designate the compatible 1492 cable for that 1794 I/O and 1492 Wiring System Module combination.
4. Select the desired 1492 Wiring System Module.
5. Configure the cable catalog number using 1492-CAB❶ (for digital cables) or 1492-ACAB❶ (for analog cables). See footnote ❶ on page 57.

Note: Footnotes are on the following page.

Pre-Wired Cable and IFMs for Bulletin 1794 Digital 8-Point and 16-Point I/O Modules ❸

Description of 20-PIN IFM and Flex Distributed I/O	Cat. No. for Wiring System Module with Fixed Terminal Block	Cat. No. for Wiring System Module with Removable Terminal Block Socket Assembly (order plugs separately	Cat. No. for Compatible Screw Style (N) and Push-in Style (P) RTB Plugs ❶	Flex Digital I/O Module — Uses D-Shell Base 1794-TB37DS										
				IB16	IB8	IB10XOB6	IV16	OB16	OB16P	OB8	OB8EP	OV16	OV16P	OW8
Feed-through														
Standard 264V AC/DC Max.	1492-IFM20F	1492-RIFM20F	1492-RTB20✪	A94	A94	A94	A94	A94	A94	A94	A94	A94	A94	A94
Narrow standard 132V AC/DC Max.	1492-IFM20FN	1492-RIFM20FN	1492-RTB10✪	A94	A94	A94	A94	A94	A94	A94	A94	A94	A94	A94
Extra terminals (2 per I/O) 264V AC/DC Max.	1492-IFM20F-2	1492-RIFM20F-2	1492-RTB20✪	A94	A94	A94	A94	A94	A94	A94	A94	A94	A94	A94
3-wire sensor type input devices 132V AC/DC Max.	1492-IFM20F-3	—	—	A94	A94	—	A94	—	—	—	—	—	—	—
LED Indicating														
Standard with 24V AC/DC LEDs	1492-IFM20D24	—	—	—	—	—	—	A94	A94	A94	A94	A94	A94	—
Narrow standard with 24V AC/DC LEDs	1492-IFM20D24N	—	—	A94	A94	—	—	A94	A94	A94	A94	—	—	—
Standard with 120V AC/DC LEDs	1492-IFM20D120	—	—	—	—	—	—	—	—	—	—	—	—	—
Narrow standard with 120V AC LEDs	1492-IFM20D120N	—	—	—	—	—	—	—	—	—	—	—	—	—
24V AC/DC LEDs and extra terminals for outputs	1492-IFM20D24-2	—	—	—	—	—	—	A94	A94	A94	A94	A94	A94	—
24V AC/DC LEDs and extra terminals for inputs	1492-IFM20D24A-2	—	—	A94	A94	—	A94	—	—	—	—	—	—	—
120V AC LEDs and extra terminals for outputs	1492-IFM20D120-2	—	—	—	—	—	—	—	—	—	—	—	—	—
120V AC LEDs and extra terminals for inputs	1492-IFM20D120A-2	—	—	—	—	—	—	—	—	—	—	—	—	—
3-wire sensor with 24V AC/DC LEDs	1492-IFM20D24-3	—	—	—	—	—	—	—	—	—	—	—	—	—
8 Individually isolated with 24/48V AC/DC LEDs and 4 terminals/output	1492-IFM20DS24-4	—	—	—	—	—	—	—	—	—	—	—	—	A94
8 Individually isolated with 120V AC LEDs and 4 terminals/output	1492-IFM20DS120-4	—	—	—	—	—	—	—	—	—	—	—	—	A94
240V AC LEDs and extra terminals for outputs	1492-IFM20D240-2	—	—	—	—	—	—	—	—	—	—	—	—	—
240V AC LEDs and extra terminals for inputs	1492-IFM20D240A-2	—	—	—	—	—	—	—	—	—	—	—	—	—
Fusible														
120V AC/DC with extra terminals for outputs	1492-IFM20F-F-2	1492-RIFM20F-F-2	1492-RTB20✪	—	—	—	—	A94	A94	A94	A94	A94	A94	—
Extra terminals with 24V AC/DC blown fuse LED indicators	1492-IFM20F-F24-2	1492-RIFM20F-F24-2	1492-RTB20✪	—	—	—	—	A94	A94	A94	A94	A94	A94	—
Extra terminals with 120V AC/DC blown fuse LED indicators	1492-IFM20F-F120-2	1492-RIFM20F-F120-2	1492-RTB20✪	—	—	—	—	—	—	—	—	—	—	—
Extra terminals with 240V AC/DC blown fuse LED indicators	1492-IFM20F-F240-2	—	—	—	—	—	—	—	—	—	—	—	—	—
Extra terminals with 24V AC/DC blown fuse LED indicators	1492-IFM20F-F24A-2	1492-RIFM20F-F24A-2	1492-RTB20✪	A94	A94	—	—	—	—	—	—	—	—	—
Extra terminals with 120V AC/DC blown fuse LED indicators	1492-IFM20F-F120A-2	1492-RIFM20F-F120A-2	1492-RTB20✪	—	—	—	—	—	—	—	—	—	—	—
8 Individually isolated 120V AC/DC with extra terminals for outputs	1492-IFM20F-FS-2	—	—	—	—	—	—	—	—	—	—	—	—	A94
8 Individually isolated with extra terminals and 24V AC/DC blown fuse LED indicators	1492-IFM20F-FS24-2	—	—	—	—	—	—	—	—	—	—	—	—	A94
Two 4-point isolated groups with four terminals/input and 24V AC/DC blown fuse LED indicators	1492-IFM20F-FS24A-4	—	—	—	—	—	—	—	—	—	—	—	—	—
8 Individually isolated with extra terminals output, and 120V AC/DC blown fuse LED indicators	1492-IFM20F-FS120-2	—	—	—	—	—	—	—	—	—	—	—	—	A94
8 Individually isolated with four terminals/output and 120V AC/DC blown fuse LED indicators	1492-IFM20F-FS120-4	—	—	—	—	—	—	—	—	—	—	—	—	—
Two 4-point isolated groups with four terminals/input and 120V AC/DC blown fuse indicators	1492-IFM20F-FS120A-4	—	—	—	—	—	—	—	—	—	—	—	—	—
8 Individually isolated with 4 terminals/output and 240V AC/DC blown fuse indicators	1492-IFM20F-FS240-4	—	—	—	—	—	—	—	—	—	—	—	—	—

Note: Footnotes are on the following page.

Pre-Wired Cable and IFMs for Bulletin 1794 Digital 8-Point and 16-Point I/O Modules ❸ (Continued)

Description of 20-PIN IFM and Flex Distributed I/O	Cat. No. for Wiring System Module with Fixed Terminal Block	Cat. No. for Wiring System Module with Removable Terminal Block Socket Assembly (order plugs separately	Cat. No. for Compatible Screw Style (N) and Push-in Style (P) RTB Plugs ❶	Flex Digital I/O Module — Uses D-Shell Base 1794-TB37DS										
				IB16	IB8	IB10XOB6	IV16	OB16	OB16P	OB8	OB8EP	OV16	OV16P	OW8
Relay Master (LED Indicating) ❺❻														
20-pin master with eight (8) 24V DC relays	1492-XIM2024-8R	—	—	—	—	—	—	A94	A94	A94	—	—	—	—
20-pin master with eight (8) 120V AC relays	1492-XIM20120-8R	—	—	—	—	—	—	—	—	—	—	—	—	—
20-pin master with sixteen (16) 120V AC relays	1492-XIM20120-16R	—	—	—	—	—	—	—	—	—	—	—	—	—
20-pin master with sixteen (16) 120V AC relays with fusing	1492-XIM20120-16RF	—	—	—	—	—	—	—	—	—	—	—	—	—
20-pin master relay with sixteen (16) 24V DC relays	1492-XIM2024-16R	—	—	—	—	—	—	A94	A94	—	—	—	—	—
20-pin master with sixteen (16) 24V DC relays with fusing	1492-XIM2024-16RF	—	—	—	—	—	—	A94	A94	—	—	—	—	—
Relay Expander (LED Indicating) ❺❻														
Expander with eight (8) 24V DC relays	1492-XIM24-8R	1492-RXIM24-8R	1492-RTB12✪	—	—	—	—	❷	❷	—	—	—	—	—
Expander with eight (8) 120V AC relays	1492-XIM120-8R	—	—	—	—	—	—	—	—	—	—	—	—	—
Fusible Expander														
8-channel expander with 24V DC blown fuse indicators	1492-XIMF-F24-2	—	—	—	—	—	—	❷	❷	—	—	—	—	—
8-channel expander with 120V AC blown fuse indicators	1492-XIMF-F120-2	—	—	—	—	—	—	—	—	—	—	—	—	—
Feed-through Expander														
Expander with eight (8) feed-through channels	1492-XIMF-2	—	—	—	—	—	—	❷	❷	—	—	—	—	—

❶ Order plugs separately (two plugs per catalog number). Plugs are available in screw style and push in style terminal types. To order, replace the ✪ in the catalog number with the code for the desired terminal style. The code for screw style is N and the code for push in style is P. The number (i.e, 20) in the cat. no. indicates the number of connections/pole.
❷ Can have up to one relay expansion module depending upon relay master used (total 16 points or less). Extender cable is provided.
❸ Cables are available in standard lengths of 0.5 m 1.0 m, 2.5 m, and 5.0 m. To order, insert the code for the desired cable length into the catalog number 005 = 0.5 m (010 = 1.0 m, 025 = 2.5 m, and 050 = 5.0 m), and insert the letter in the box. Example: **Catalog Number 1492-CAB010A94** is for a 1.0 m cable, and the suffix A94.
❹ This IFM is not recommended for use with PLC I/O modules that have an off-state leakage current exceeding 0.5 mA. Use a 1492-IFM20D120N or 1492-IFM20D120A-2 for inputs. Use 1492-IFM20D120-2 for outputs.
❺ The voltage rating is relay control/coil voltage. For Relay Contact Ratings, refer to page 192.
❻ The LED indicates the PLC output status.

Pre-Wired Cables and IFMs for Bulletin 1794 Digital 16-Point Isolated and 32-Point I/O Modules ❸

Description of 40-PIN IFM	Cat. No. for Wiring System Module with Fixed Terminal Block	Cat. No. for Wiring System Module with Removable Terminal Block Socket Assembly (order plugs separately)	Cat. No. for Compatible Screw Style (N) and Push-in Style (P) RTB Plug ❻	Flex Digital I/O Module — Uses D-Shell Base 1794-TB62DS…			
				IB16D	IB16XOB16P	IB32	OB32P
Feed-through							
Standard 132V AC/DC Max.	1492-IFM40F	1492-RIFM40F	1492-RTB20✪	B94	B94	B94	B94
Extra terminals (2 per I/O) 132V AC/DC Max.	1492-IFM40F-2	1492-RIFM40F-2	1492-RTB20✪	B94	B94	B94	B94
3-wire sensor type input devices 60V AC/DC Max.	1492-IFM40F-3	—	—	—	—	—	—
LED Indicating							
Standard with 24V AC/DC LEDs	1492-IFM40D24	1492-RIFM40D24	1492-RTB20✪	—	—	B94	B94
24V AC/DC LEDs and extra terminals for outputs	1492-IFM40D24-2	—	—	—	—	—	B94
24V AC/DC LEDs and extra terminals for inputs	1492-IFM40D24A-2	1492-RIFM40D24A-2	1492-RTB20✪	—	—	—	—
120V AC LEDs and extra terminals for outputs	1492-IFM40D120-2	—	—	—	—	—	—
120V AC LEDs and extra terminals for inputs	1492-IFM40D120A-2	—	—	—	—	—	—
3-wire sensor with 24V AC/DC LEDs	1492-IFM40D24-3	—	—	—	—	—	—
16 Individually isolated with 24/48V AC/DC LEDs and 4 terminals/output	1492-IFM40DS24-4	—	—	—	—	—	—
16 Individually isolated with 24V AC/DC LEDs and 4 terminals/input	1492-IFM40DS24A-4	—	—	—	—	—	—
16 Individually isolated with 120V AC LEDs and 4 terminals/output	1492-IFM40DS120-4	—	—	—	—	—	—
16 Individually isolated with 120V AC LEDs and 4 terminals/input	1492-IFM40DS120A-4	—	—	—	—	—	—

Pre-Wired Cables and IFMs for Bulletin 1794 Digital 16-Point Isolated and 32-Point I/O Modules (Continued)❸

Description of 40-PIN IFM	Cat. No. for Wiring System Module with Fixed Terminal Block	Cat. No. for Wiring System Module with Removable Terminal Block Socket Assembly (order plugs separately)	Cat. No. for Compatible Screw Style (N) and Push-in Style (P) RTB Plug ❻	Flex Digital I/O Module — Uses D-Shell Base 1794-TB62DS…			
				IB16D	IB16XOB16P	IB32	OB32P
16 Individually isolated with 240V AC LEDs and 4 terminals/input	1492-IFM40DS240A-4	—	—	—	—	—	—
Fusible							
120V AC/DC with extra terminals for outputs	1492-IFM40F-F-2	—	—	—	—	—	B94
Extra terminals with 24V AC/DC blown fuse indicators for outputs	1492-IFM40F-F24-2	1492-RIFM40F-F24-2	1492-RTB20✪	—	—	—	B94
Extra terminals with 120V AC/DC blown fuse indicators for outputs	1492-IFM40F-F120-2	—	—	—	—	—	—
16 Individually isolated with extra terminals for 120V AC DC outputs	1492-IFM40F-FS-2	—	—	—	—	—	—
Individually isolated with extra terminals and 24V AC/DC blown fuse indicators for outputs	1492-IFM40F-FS24-2	—	—	—	—	—	—
16 Individually isolated with 24V AC/DC blown fuse indicators and 4 terminals/output	1492-IFM40F-FS24-4	—	—	—	—	—	—
16 Individually isolated 240V AC/DC with 4 terminals/output	1492-IFM40F-FS-4	—	—	—	—	—	—
16 Individually isolated with extra terminals and 120V AC/DC blown fuse indicators for outputs	1492-IFM40F-FS120-2	1492-RIFM40F-FS120-2	1492-RTB20✪	—	—	—	—
16 Individually isolated with 120V AC/DC blown fuse indicators and 4 terminals/output	1492-IFM40F-FS120-4	1492-RIFM40F-FS120-4	1492-RTB17✪	—	—	—	—
16 Individually isolated with 240V AC/DC blown fuse indicators and 4 terminals/output	1492-IFM40F-FS240-4	—	—	—	—	—	—
16 Individually isolated with 24V AC/DC blown fuse indicators and 4 terminals/input	1492-IFM40F-FS24A-4	—	—	—	—	—	—
16 Individually isolated with 120V AC/DC 4 terminals/input	1492-IFM40F-FSA-4	—	—	—	—	—	—
16 Individually isolated with 120V AC/DC blown fuse indicators and 4 terminals/input	1492-IFM40F-FS120A-4	1492-RIFM40F-FS120A-4	1492-RTB17✪	—	—	—	—
16 Individually isolated with 240 VAC/DC blown fuse indicators and 4 terminals/input	1492-IFM40F-FS240A-4	—	—	—	—	—	—
Relay Master (LED Indicating) ❹❺							
40-pin master with eight (8) 24V DC relays	1492-XIM4024-8R	—	—	—	—	—	B94
40-pin master with sixteen (16) 24V DC relays	1492-XIM4024-16R	1492-RXIM4024-16R	1492-RTB14✪	—	—	—	B94
40-pin master with sixteen (16) 24V DC relays with fusing	1492-XIM4024-16RF	—	—	—	—	—	B94
Relay Expander (LED Indicating) ❹❺							
Expander with eight (8) 24V DC relays	1492-XIM24-8R	1492-RXIM24-8R	1492-RTB12✪	—	—	—	❶
Expander with eight (8) 120V AC relays	1492-XIM120-8R	—	—	—	—	—	—
Fusible Expander							
8-channel expander with 24V DC blown fuse indicators	1492-XIMF-F24-2	—	—	—	—	—	❶
8-channel expander with 120V AC blown fuse indicators	1492-XIMF-F120-2	—	—	—	—	—	—
Expander with sixteen (16) 24V DC relays with fusing	1492-XIM24-16RF	—	—	—	—	—	❷
Feed through Expander							
Expander with eight (8) feed-through channels	1492-XIMF-2	—	—	—	—	—	❶

❶ Two or three expanders are connected to a master to provide a total of 32 outputs max (depends on PLC module). An extender cable is included with each expander to connect it to the master.

❷ One 1492-XIM24-16RF is to be used with one 1492-XIM4024-16R AND 1492-XIM4024-16RF master (32 PT. only).

❸ Cables are available in standard lengths of 0.5 m 1.0 m, 2.5 m, and 5.0 m. To order, insert the code for the desired cable length into the catalog number 005 = 0.5 m (010 = 1.0 m, 025 = 2.5 m, and 050 = 5.0 m), and insert the letter in the box. Example: **Catalog Number 1492-CAB010A94** is for a 1.0 m cable, and the suffix A94

❹ The voltage rating is relay control/coil voltage. For Relay Contact Ratings, refer to page 192.

❺ The LED indicates the PLC output status.

❻ Order plugs separately (two plugs per catalog number). Plugs are available in screw style and push in style terminal types. To order, replace the ✪ in the catalog number with the code for the desired terminal style. The code for screw style is N and the code for push in style is P. The number (i.e, 20) in the cat. no. indicates the number of connections/pole.

Bulletin 1794 Pre-wired Cables

These **pre-wired cables** have a 37- or 62-pin D-shell connector on one end to mate with the Flex base (Cat. No. 1492-TB37DS or -TB62DS) and a 20- or 40–pin AMP connector at the other end to mate with the IFM/XIM module. You must first select the IFM/XIM from one of the preceding selection tables.

Pre-Wired Cables for Bulletin 1794 Flex Digital I/O Modules Using Flex Base 1794-TB37DS or -TB62DS

Cable Cat. No.	Standard Cable Lengths	Build-to-Order Available	No. of Conductors	Uses Flex Base	Mating 1794 I/O Modules Catalog Number
1492-CAB❶A94	0.5, 1.0, 2.5, 5.0 m	Yes	20	1794-TB37DS	1794-IB16, -IB8, -IV16, -OB16, -OB16P, -OB8, -OB8EP, -OV16, -OV16P,-OW8, -IB10XOB8
1492-CAB❶B94	0.5, 1.0, 2.5, 5.0 m	Yes	40	1794-TB62DS	1794-IB16D, -IB32, -OB32P, -IB16XOB16P

❶ Cables are available in standard lengths of 0.5 m, 1.0 m, 2.5 m, and 5.0 m. To order, insert the code for the desired cable length into the catalog number (005 = 0.5 m, 010 = 1.0 m, 025 = 2.5 m, and 050 = 5.0 m). Example: **Catalog Number 1492-CAB050A94** is for a 5.0 m cable that could be used to connect a Catalog Number 1492-IFM40F IFM to a Catalog Number 1794-IB16 I/O module.

The **I/O module-ready cables** have a 37- or 62-pin D-shell connector on one end to mate with the Cat. No. 1794-TB37DS or 1794-TB62DS Flex I/O base and 20 or 40 individually colored #22 AWG conductors (flying leads) at the other end. These cables provide the convenience of pre-wired connectors at the I/O module end, while allowing the flexibility to field-wire to standard terminal blocks of your choice.

I/O Module-Ready Cables for 1794 Flex Digital I/O modules Using Flex Base 1794-TB37DS or -TB62DS

Cable Cat. No.	Standard Cable Lengths	Build-to-Order Available	No. of Conductors	Uses Flex Base	Mating 1794 I/O Modules Catalog Number
1492-CAB❶G94	1.0, 2.5, 5.0 m	Yes	20	1794-TB37DS	1794-IB16, -IB8, -IV16, -OB16, -OB16P, -OB8, –OB8EP, -OV16, -OV16P,-OW8, -IB10XOB8
1492-CAB❶H94	1.0, 2.5, 5.0 m	Yes	40	1794-TB62DS	1794-IB16D, -IB32, -OB32P, -IB16XOB16P

❶ Cables are available in standard lengths of 1.0 m, 2.5 m, and 5.0 m. To order, insert the code for the desired cable length into the catalog number (010 = 1.0 m, 025 = 2.5 m, and 050 = 5.0 m). Example: **Catalog Number 1492-CAB050G94** is for a 5.0 m cable.

Pre-Wired Cable, Analog, and Specialty IFMs for Bulletin 1794 Analog I/O Modules

Description of AIFM	Cat. No. for Wiring System Module with Fixed Terminal Block	Cat. No. for Wiring System Module with Removable Terminal Block Socket Assembly (order plugs separately	Cat. No. for Compatible Screw Style (N) and Push-in Style (P) RTB Plug ❸	I/O Module Catalog Number 1794-… ❶					
				IE4XOE2	IE8	IF2XOF2I	IF4I	OE4	OF4I
Feed-through									
4-channel input, output or 2 in/2 out combination with 3 terminal/channel	1492-AIFM4-3	1492-RAIFM4-3	1492-RTB8✪	—	—	—	—	—	—
6-channel isolated with 3...4 terminals/channel	1492-AIFM6S-3	1492-RAIFM6S-3	1492-RTB12✪	—	—	—	—	—	—
8-channel differential 16-channel single-ended with 3 terminals/channel	1492-AIFM8-3	1492-RAIFM8-3	1492-RTB16✪	Z94	Z94	Z94	Z94	Z94	Z94
Thermocouple									
6-channel with 3 terminals/channel ❷	1492-AIFM6TC-3	—	—	—	—	—	—	—	—
Fusible									
4-channel with 24V DC blown fuse indicators, test points, 5 terminals/input	1492-AIFM4I-F-5	—	—	—	—	—	—	—	—
2-channel with 24V DC blown fuse indicators, test points, 5 terminals/input, 3 terminals/output	1492-AIFM4C-F-5	—	—	—	—	—	—	—	—
8-channel input with 24V DC blown fuse indicators, 5 terminals/channel	1492-AIFM8-F-5	—	—	Z94	Z94	Z94	Z94	—	—
16-channel input with 24V DC blown fuse indicators, 3 terminals/channel	1492-AIFM16-F-3	—	—	—	—	—	—	—	—
16-channel input with 24V DC blown fuse indicators, 5 terminals/channel	1492-AIFM16-F-5	—	—	—	—	—	—	—	—
4-input/4-output channel with 8 fuses and 24V blown fuse indicators	1492-AIFMMQS	—	—	—	—	—	—	—	—

❶ Cables are available in standard lengths of 0.5 m 1.0 m, 2.5 m, and 5.0 m. To order, insert the code for the desired cable length into the catalog number 005 = 0.5 m (010 = 1.0 m, 025 = 2.5 m, and 050 = 5.0 m), and insert the letter in the box. Example: **Catalog Number 1492-ACAB010Z94** is for a 1.0 m cable, and the suffix Z94.
❷ Cannot be used with 1794 I/O.
❸ Order plugs separately (two plugs per catalog number). Plugs are available in screw style and push in style terminal types. To order, replace the ✪ in the catalog number with the code for the desired terminal style. The code for screw style is N and the code for push in style is P. The number (i.e, 20) in the cat. no. indicates the number of connections/pole.

These **pre-wired cables** have a wiring arm on one end to connect to the front of a Bulletin 1794 analog I/O module and a connector on the other end to plug into a 15- or 25-pin D-shell terminal AIFM. You must first select the AIFM from the preceding selection table

Pre-Wired Cables for 1794 Flex Analog I/O modules Using Flex Base 1794-TB37DS or -TB62DS

Cable Cat. No.	Standard Cable Lengths	Build-to-Order Available	No. of Conductors	Uses Flex Base	Mating 1794 I/O Modules Catalog Number
1492-ACAB❶Z94	0.5, 1.0, 2.5, 5.0 m	Yes	20	1794-TB37DS	1794-IE8, -IF4I, -OE4, -IE4XOE2, -IF2XOF2I

❶ Cables are available in standard lengths of 0.5 m, 1.0 m, 2.5 m, and 5.0 m. To order, insert the code for the desired cable length into the catalog number (005 = 0.5 m, 010 = 1.0 m, 025 = 2.5 m, and 050 = 5.0 m). Example: **Catalog Number 1492-ACAB050Z94** is for a 5.0 m cable, and the suffix Z94.

Note: Footnotes are on the following page.

Using Bulletin 1771 Selection Tables to Make Valid 1492 Wiring System Module Catalog Numbers

Follow these steps when using the selection tables to make valid catalog numbers:

1. Find the appropriate table based on the catalog number of the 1771 I/O module.
2. Find the column in the selected table for the 1771 I/O module.
3. Follow the column down to determine which Wiring System Modules are compatible with the I/O module as indicated by letter code. If there is no letter code, the Wiring System Module is not compatible with the I/O module. NOTE: The letter codes designate the compatible 1492 cable for that 1771 I/O and Wiring System Module combination.
4. Select the desired Wiring System Module.
5. Configure the cable catalog number using 1492-CABLE❶ (for digital cables) or 1492-ACABLE❶ (for analog cables). See footnote ❶ on pages 62 and 64.

Bulletin 1771 PLC-5 IFMs and Cables

IFMs for Bulletin 1771 Digital 8-Point and 16-Point I/O Modules

Description of 20-PIN IFM	Cat. No. for Wiring System Module with Fixed Terminal Block	Cat. No. for Wiring System Module with Removable Terminal Block Socket Assembly (order plugs separately	I/O Module Catalog Number 1771-…																
			IA	IA2	IAD	IB	IBD	ICD	IGD	IMD	IH	IN	IND	IT	OAD❶	OBD❶	OGD	OMD	OND❶
Feed-through																			
Standard 264V AC/DC Max.	1492-IFM20F	1492-RIFM20F❼	—	—	F	—	F	F	F	F	—	—	F	—	F,FF	F,FF	F	F	F,FF
Narrow standard 132V AC/DC Max.	1492-IFM20FN	1492-RIFM20FN❻	—	—	F	—	F	F	F	—	—	—	F	—	F,FF	F,FF	F	—	F,FF
Extra terminals (2 per I/O) 264V AC/DC Max.	1492-IFM20F-2	1492-RIFM20F-2❼	—	—	F	—	F	F	F	F	—	—	F	—	F,FF	F,FF	F	F	F,FF
3-wire sensor type input devices 132V AC/DC Max.	1492-IFM20F-3	—	—	—	F	—	F	F	F	—	—	—	F	—	—	—	—	—	—
LED Indicating																			
Standard with 24V AC/DC LEDs	1492-IFM20D24	—	—	—	—	—	F	F	—	—	—	—	F	—	F,FF	F,FF	—	—	F,FF
Narrow standard with 24V AC/DC LEDs	1492-IFM20D24N	—	—	—	—	—	F	F	—	—	—	—	F	—	F,FF	F,FF	—	—	F,FF
Standard with 120V AC/DC LEDs	1492-IFM20D120❹	—	—	—	F	—	—	—	—	—	—	—	—	—	—	—	—	—	—
Narrow standard with 120V AC LEDs	1492-IFM20D120N	—	—	—	F	—	—	—	—	—	—	—	—	—	F,FF	—	—	—	—
24V AC/DC LEDs and extra terminals for outputs	1492-IFM20D24-2	—	—	—	—	—	—	—	—	—	—	—	—	—	F,FF	F,FF	—	—	F,FF
24V AC/DC LEDs and extra terminals for inputs	1492-IFM20D24A-2	—	—	—	—	—	F	F	—	—	—	—	F	—	—	—	—	—	—
120V AC LEDs and extra terminals for outputs	1492-IFM20D120-2	—	—	—	—	—	—	—	—	—	—	—	—	—	F,FF	—	—	—	—
120V AC LEDs and extra terminals for inputs	1492-IFM20D120A-2	—	—	—	F	—	—	—	—	—	—	—	—	—	—	—	—	—	—
3-wire sensor with 24V AC/DC LEDs	1492-IFM20D24-3	—	—	—	—	—	F	F	—	—	—	—	—	—	—	—	—	—	—
8 Individually isolated with 24/48V AC/DC LEDs and 4 terminals/output	1492-IFM20DS24-4	—	—	—	—	—	—	—	—	—	—	—	—	—	—	—	—	—	—
8 Individually isolated with 120V AC LEDs and 4 terminals/output	1492-IFM20DS120-4	—	—	—	—	—	—	—	—	—	—	—	—	—	—	—	—	—	—
240V AC LEDs and extra terminals for outputs	1492-IFM20D240-2	—	—	—	—	—	—	—	—	—	—	—	—	—	—	—	—	F	—
240V AC LEDs and extra terminals for inputs	1492-IFM20D240A-2	—	—	—	—	—	—	—	—	F	—	—	—	—	—	—	—	—	—
Fusible																			
120V AC/DC with extra terminals for outputs	1492-IFM20F-F-2	1492-RIFM20F-F-2❼	—	—	—	—	—	—	—	—	—	—	—	—	F	F	—	—	F
Extra terminals with 24V AC/DC blown fuse LED indicators	1492-IFM20F-F24-2	1492-RIFM20F-F24-2❼	—	—	—	—	—	—	—	—	—	—	—	—	F	F	—	—	F
Extra terminals with 120V AC/DC blown fuse LED indicators	1492-IFM20F-F120-2	1492-RIFM20F-F120-2❼	—	—	—	—	—	—	—	—	—	—	—	—	F	—	—	—	—
Extra terminals with 240V AC/DC blown fuse LED indicators	1492-IFM20F-F240-2	—	—	—	—	—	—	—	—	—	—	—	—	—	—	—	—	F	—
Extra terminals with 24V AC/DC blown fuse LED indicators	1492-IFM20F-F24A-2	1492-RIFM20F-F24A-2❼	—	—	—	—	F	F	—	—	—	—	F	—	—	—	—	—	—
Extra terminals with 120V AC/DC blown fuse LED indicators	1492-IFM20F-F120A-2	1492-RIFM20F-F120A-2❼	—	—	F	—	—	—	—	—	—	—	—	—	—	—	—	—	—

IFMs for Bulletin 1771 Digital 8-Point and 16-Point I/O Modules (Continued)

Description of 20-PIN IFM	Cat. No. for Wiring System Module with Fixed Terminal Block	Cat. No. for Wiring System Module with Removable Terminal Block Socket Assembly (order plugs separately	I/O Module Catalog Number 1771-…																
			IA	IA2	IAD	IB	IBD	ICD	IGD	IMD	IH	IN	IND	IT	OAD❶	OBD❶	OGD	OMD	OND❶
8 Individually isolated 120V AC/DC with extra terminals for outputs	1492-IFM20F-FS-2	—	—	—	—	—	—	—	—	—	—	—	—	—	—	—	—	—	—
8 Individually isolated with extra terminals and 24V AC/DC blown fuse LED indicators	1492-IFM20F-FS24-2	—	—	—	—	—	—	—	—	—	—	—	—	—	—	—	—	—	—
Two 4-point isolated groups with four terminals/input and 24V AC/DC blown fuse LED indicators	1492-IFM20F-FS24A-4	—	—	—	—	T	—	—	—	—	T	T	—	T	—	—	—	—	—
8 Individually isolated with extra terminals output, and 120V AC/DC blown fuse LED indicators	1492-IFM20F-FS120-2	—	—	—	—	—	—	—	—	—	—	—	—	—	—	—	—	—	—
8 Individually isolated with four terminals/output and 120V AC/DC blown fuse LED indicators	1492-IFM20F-FS120-4	—	—	—	—	—	—	—	—	—	—	—	—	—	—	—	—	—	—
Two 4-point isolated groups with four terminals/input and 120V AC/DC blown fuse indicators	1492-IFM20F-FS120A-4	—	T	T	—	—	—	—	—	—	—	—	—	—	—	—	—	—	—
8 Individually isolated with 4 terminals/output and 240V AC/DC blown fuse indicators	1492-IFM20F-FS240-4	—	—	—	—	—	—	—	—	—	—	—	—	—	—	—	—	—	—
Relay Master (LED Indicating) ❺❻																			
20-pin master with eight (8) 24V DC relays	1492-XIM2024-8R	—	—	—	—	—	—	—	—	—	—	—	—	—	—	F,FF	—	—	—
20-pin master with eight (8) 120V AC relays	1492-XIM20120-8R	—	—	—	—	—	—	—	—	—	—	—	—	—	F,FF	—	—	—	—
20-pin master with sixteen (16) 120V AC relays	1492-XIM20120-16R	—	—	—	—	—	—	—	—	—	—	—	—	—	F,FF	—	—	—	—
20-pin master with sixteen (16) 120V AC relays with fusing	1492-XIM20120-16RF	—	—	—	—	—	—	—	—	—	—	—	—	—	F,FF	—	—	—	—
20-pin master relay with sixteen (16) 24V DC relays	1492-XIM2024-16R	—	—	—	—	—	—	—	—	—	—	—	—	—	—	F,F	—	—	—
20-pin master with sixteen (16) 24V DC relays with fusing	1492-XIM2024-16RF	—	—	—	—	—	—	—	—	—	—	—	—	—	—	F,F	—	—	—
Relay Expander (LED Indicating) ❺❻																			
Expander with eight (8) 24V DC relays	1492-XIM24-8R	—	—	—	—	—	—	—	—	—	—	—	—	—	—	❷	—	—	—
Expander with eight (8) 120V AC relays	1492-XIM120-8R	—	—	—	—	—	—	—	—	—	—	—	—	—	❷	—	—	—	—
Fusible Expander																			
8-channel expander with 24V DC blown fuse indicators	1492-XIMF-F24-2	—	—	—	—	—	—	—	—	—	—	—	—	—	—	❷	—	—	—
8-channel expander with 120V AC blown fuse indicators	1492-XIMF-F120-2	—	—	—	—	—	—	—	—	—	—	—	—	—	❷	—	—	—	—
Feed-through Expander																			
Expander with eight (8) feed-through channels	1492-XIMF-2	—	—	—	—	—	—	—	—	—	—	—	—	—	❷	❷	—	—	—

❶ Either F or FF.
❷ One expander is connected to a master to provide a total of 16 outputs. An extender cable is included with each expander to connect it to the master.
❸ Cables are available in standard lengths of 0.5 m 1.0 m, 2.5 m, and 5.0 m. To order, insert the code for the desired cable length into the catalog number 005 = 0.5 m (010 = 1.0 m, 025 = 2.5 m, and 050 = 5.0 m), and insert the letter in the box. Example: **Catalog Number 1492-CABLE050A** is for a 5.0 m cable, and the letter A.
❹ This IFM is not recommended for use with PLC I/O modules that have an off-state leakage current exceeding 0.5 mA. Use a 1492-IFM20D120N or 1492-IFM20D120A-2 for inputs. Use 1492-IFM20D120-2 for outputs.
❺ The voltage rating is relay control/coil voltage. For Relay Contact Ratings, refer to page 192.
❻ The LED indicates the PLC output status.
❼ Compatible Removable Terminal Block (RTB) plug; 1492-RTB20N (screw style terminals) or 1492-RTB20P. ORDER PLUGS SEPARATELY.
❽ Compatible Removable Terminal Block (RTB) plug; 1492-RTB10N (screw style terminals) or 1492-RTB10P. ORDER PLUGS SEPARATELY.

Bulletin 1771 PLC-5 IFMs and Cables, Continued

IFMs for Bulletin 1771 Digital 16-Point Isolated and 32-Point I/O Modules ❸

Description of 40-PIN IFM	Cat. No. for Wiring System Module with Fixed Terminal Block	Cat. No. for Wiring System Module with Removable Terminal Block Socket Assembly (order plugs separately	I/O Module Catalog Number 1771-…															
			IAN	IBN	ID16	IQ16	IVN	OAN	OBN	OD16	ODD	OQ16	OVN	OW16	OWN	OWNA	scIM16❹	scOM16❹
Feed-through																		
Standard 132V AC/DC Max.	1492-IFM40F	1492-RIFM40F❽	J	J	M	M	K	L	L	M	M	M	L	R	L	L	—	M
Extra terminals (2 per I/O) 132V AC/DC Max.	1492-IFM40F-2	1492-RIFM40F-2❽	J	J	—	—	K	L	L	—	—	—	L	R	L	L	—	—

Note: Footnotes are on the following page.

IFMs for Bulletin 1771 Digital 16-Point Isolated and 32-Point I/O Modules (Continued)❸

Description of 40-PIN IFM	Cat. No. for Wiring System Module with Fixed Terminal Block	Cat. No. for Wiring System Module with Removable Terminal Block Socket Assembly (order plugs separately	I/O Module Catalog Number 1771-…															
			IAN	IBN	ID16	IQ16	IVN	OAN	OBN	OD16	ODD	OQ16	OVN	OW16	OWN	OWNA	scIM16❹	scOM16❹
3-wire sensor type input devices 60V AC/DC Max.	1492-IFM40F-3	—	—	J	—	—	K	—	—	—	—	—	—	—	—	—	—	—
LED Indicating																		
Standard with 24V AC/DC LEDs	1492-IFM40D24	1492-RIFM40D24❽	—	J	—	—	K	—	L	—	—	—	L	—	L	L	—	—
24V AC/DC LEDs and extra terminals for outputs	1492-IFM40D24-2	—	—	—	—	—	—	—	L	—	—	—	L	—	L	L	—	—
24V AC/DC LEDs and extra terminals for inputs	1492-IFM40D24A-2	1492-RIFM40D24A-2❽	—	J	—	—	K	—	—	—	—	—	—	—	—	—	—	—
120V AC LEDs and extra terminals for outputs	1492-IFM40D120-2	—	—	—	—	—	—	L	—	—	—	—	—	—	L	L	—	—
120V AC LEDs and extra terminals for inputs	1492-IFM40D120A-2	—	J	—	—	—	—	—	—	—	—	—	—	—	—	—	—	—
3-wire sensor with 24V AC/DC LEDs	1492-IFM40D24-3	—	—	J	—	—	K	—	—	—	—	—	—	—	—	—	—	—
16 Individually isolated with 24/48V AC/DC LEDs and 4 terminals/output	1492-IFM40DS24-4	—	—	—	—	—	—	—	—	—	—	M	—	—	—	—	—	—
16 Individually isolated with 24V AC/DC LEDs and 4 terminals/input	1492-IFM40DS24A-4	—	—	—	—	M	—	—	—	—	—	—	—	—	—	—	—	—
16 Individually isolated with 120V AC LEDs and 4 terminals/output	1492-IFM40DS120-4	—	—	—	—	—	—	—	—	M	M	—	—	—	—	—	—	M
16 Individually isolated with 120V AC LEDs and 4 terminals/input	1492-IFM40DS120A-4	—	—	—	M	—	—	—	—	—	—	—	—	—	—	—	—	—
16 Individually isolated with 240V AC LEDs and 4 terminals/input	1492-IFM40DS240A-4	—	—	—	—	—	—	—	—	—	—	—	—	—	—	—	M	—
Fusible																		
120V AC/DC with extra terminals for outputs	1492-IFM40F-F-2	—	—	—	—	—	—	L	L	—	—	—	L	—	L	L	—	—
Extra terminals with 24V AC/DC blown fuse indicators for outputs	1492-IFM40F-F24-2	1492-RIFM40F-F24-2❽	—	—	—	—	—	—	L	—	—	—	L	—	L	L	—	—
Extra terminals with 120V AC/DC blown fuse indicators for outputs	1492-IFM40F-F120-2	—	—	—	—	—	—	L	—	—	—	—	—	—	L	L	—	—
16 Individually isolated with extra terminals for 120V AC DC outputs	1492-IFM40F-FS-2	—	—	—	—	—	—	—	—	M	M	M	—	R71 ❺	—	—		M
Individually isolated with extra terminals and 24V AC/DC blown fuse indicators for outputs	1492-IFM40F-FS24-2	—	—	—	—	—	—	—	—	—	—	M	—	R71 ❺	—	—	—	—
16 Individually isolated with 24V AC/DC blown fuse indicators and 4 terminals/output	1492-IFM40F-FS24-4	—	—	—	—	—	—	—	—	—	—	M	—	—	—	—	—	—
16 Individually isolated 240V AC/DC with 4 terminals/output	1492-IFM40F-FS-4	—	—	—	—	—	—	—	—	—	—	M	—	—	—	—	—	—
16 Individually isolated with extra terminals and 120V AC/DC blown fuse indicators for outputs	1492-IFM40F-FS120-2	1492-RIFM40F-FS120-2❽	—	—	—	—	—	—	—	M	M	—	—	R71 ❺	—	—	—	M
16 Individually isolated with 120V AC/DC blown fuse indicators and 4 terminals/output	1492-IFM40F-FS120-4	1492-RIFM40F-FS120-4❾	—	—	—	—	—	—	—	M	M	—	—	—	—	—	—	M
16 Individually isolated with 240V AC/DC blown fuse indicators and 4 terminals/output	1492-IFM40F-FS240-4	—	—	—	—	—	—	—	—	—	—	—	—	—	—	—	—	M
16 Individually isolated with 24V AC/DC blown fuse indicators and 4 terminals/input	1492-IFM40F-FS24A-4	—	—	—	—	M	—	—	—	—	—	—	—	—	—	—	—	—
16 Individually isolated with 120V AC/DC 4 terminals/input	1492-IFM40F-FSA-4	—	—	—	M	M	—	—	—	—	—	—	—	—	—	—	—	—
16 Individually isolated with 120V AC/DC blown fuse indicators and 4 terminals/input	1492-IFM40F-FS120A-4	1492-RIFM40F-FS120A-4❾	—	—	M	—	—	—	—	—	—	—	—	—	—	—	—	—
16 Individually isolated with 240 VAC/DC blown fuse indicators and 4 terminals/input	1492-IFM40F-FS240A-4	—	—	—	—	—	—	—	—	—	—	—	—	—	—	—	—	—
Relay Master (LED Indicating) ❻❼																		
40-pin master with eight (8) 24V DC relays	1492-XIM4024-8R	—	—	—	—	—	—	—	L	—	—	—	—	—	—	—	—	—
40-pin master with sixteen (16) 24V DC relays	1492-XIM4024-16R	1492-RXIM4024-16R❿	—	—	—	—	—	—	L	—	—	—	—	—	—	—	—	—
40-pin master with sixteen (16) 24V DC relays with fusing	1492-XIM4024-16RF	—	—	—	—	—	—	—	L	—	—	—	—	—	—	—	—	—
Relay Expander (LED Indicating) ❻❼																		
Expander with eight (8) 24V DC relays	1492-XIM24-8R	1492-RXIM24-8R✪	—	—	—	—	—	—	❶	—	—	—	—	—	—	—	—	—
Expander with eight (8) 120V AC relays	1492-XIM120-8R	—	—	—	—	—	—	—	—	—	—	—	—	—	—	—	—	—
Fusible Expander																		
8-channel expander with 24V DC blown fuse indicators	1492-XIMF-F24-2	—	—	—	—	—	—	—	❶	—	—	—	—	—	—	—	—	—

IFMs for Bulletin 1771 Digital 16-Point Isolated and 32-Point I/O Modules (Continued)❸

Description of 40-PIN IFM	Cat. No. for Wiring System Module with Fixed Terminal Block	Cat. No. for Wiring System Module with Removable Terminal Block Socket Assembly (order plugs separately	I/O Module Catalog Number 1771-…															
			IAN	IBN	ID16	IQ16	IVN	OAN	OBN	OD16	ODD	OQ16	OVN	OW16	OWN	OWNA	scIM16❹	scOM16❹
8-channel expander with 120V AC blown fuse indicators	1492-XIMF-F120-2	—	—	—	—	—	—	—	—	—	—	—	—	—	—	—	—	—
Expander with sixteen (16) 24V DC relays with fusing	1492-XIM24-16RF	—	—	—	—	—	—	—	❷	—	—	—	—	—	—	—	—	—
Feed through Expander																		
Expander with eight (8) feed-through channels	1492-XIMF-2	—	—	—	—	—	—	—	❶	—	—	—	—	—	—	—	—	—

❶ Two or three expanders are connected to a master to provide a total of 32 outputs max (depends on PLC module). An extender cable is included with each expander to connect it to the master.
❷ One 1492-XIM24-16RF is to be used with one 1492-XIM4024-16R AND 1492-XIM4024-16RF master (32 PT. only).
❸ Cables are available in standard lengths of 0.5 m 1.0 m, 2.5 m, and 5.0 m. To order, insert the code for the desired cable length into the catalog number 005 = 0.5 m (010 = 1.0 m, 025 = 2.5 m, and 050 = 5.0 m), and insert the letter in the box. Example: **Catalog Number 1492-CABLE025J** is for a 2.5 m cable, and the letter J.
❹ For information concerning this I/O module contact Spectrum Controls (phone: 425-641-9473 or www.spectrumcontrols.com).
❺ Cable Catalog Number 1492-CAB❸ has the N.O. contacts only connected.
❻ The voltage rating is relay control/coil voltage. For Relay Contact Ratings, refer to page 192.
❼ The LED indicates the PLC output status.
❽ Compatible Removable Terminal Block (RTB) plug; 1492-RTB20N (screw style terminals) or 1492-RTB20P. ORDER PLUGS SEPARATELY.
❾ Compatible Removable Terminal Block (RTB) plug; 1492-RTB17N (screw style terminals) or 1492-RTB17P. ORDER PLUGS SEPARATELY.
❿ Compatible Removable Terminal Block (RTB) plug; 1492-RTB14N (screw style terminals) or 1492-RTB14P. ORDER PLUGS SEPARATELY.
✪ Compatible Removable Terminal Block (RTB) plug; 1492-RTB12N (screw style terminals) or 1492-RTB12P. ORDER PLUGS SEPARATELY.

Bulletin 1771 PLC-5 IFMs and Cables, Continued

These **pre-wired cables** have a wiring arm on one end to connect to the front of a Bulletin 1771 digital I/O module and a connector on the other end to plug into a 20- or 40-terminal IFM/XIM. You must first select the IFM/XIM from one of the preceding selection tables

Pre-Wired Cables for Bulletin 1771 Digital I/O Modules

Cable Cat. No.	Standard Cable Lengths	Build-to-Order Available	No. of Conductors	Mating 1771 I/O Modules Catalog Number
1492-CABLE❶F	0.5, 1.0, 2.5, 5.0 m	Yes	20	1771-IAD, -IBD, -ICD, -IGD, -IND, -OAD, -OBD, -OGD, -OMD, -OND, -IMD
1492-CABLE❶FF	0.5, 1.0, 2.5, 5.0 m	Yes	20	1771-OAD, -OBD, -OND
1492-CABLE❶J	0.5, 1.0, 2.5, 5.0 m	Yes	40	1771-IAN, -IBN
1492-CABLE❶K	0.5, 1.0, 2.5, 5.0 m	Yes	40	1771-IVN
1492-CABLE❶L	0.5, 1.0, 2.5, 5.0 m	Yes	40	1771-OAN, -OBN, -OVN, -OWN, -OWNA
1492-CABLE❶M	0.5, 1.0, 2.5, 5.0 m	Yes	40	1771-ID16, -IQ16, -OD16, -ODD, -OQ16, -SCIM16, -SCOM16
1492-CABLE❶R	0.5, 1.0, 2.5, 5.0 m	Yes	40	1771-OW16
1492-CAB❶R71❷	0.5, 1.0, 2.5, 5.0 m	Yes	40	1771-OW16
1492-CABLE❶T	0.5, 1.0, 2.5, 5.0 m	Yes	20	1771-IA, -IA2, -IB, -IH, -IN, -IT

❶ Cables are available in standard lengths of 0.5 m, 1.0 m, 2.5 m, and 5.0 m. To order, insert the code for the desired cable length into the catalog number (005 = 0.5 m, 010 = 1.0 m, 025 = 2.5 m, and 050 = 5.0 m). Example: **Catalog Number 1492-CABLE005M** is for a 0.5 m cable that could be used to connect a Catalog Number 1492-IFM40F IFM to a Catalog Number 1771-ODD I/O module.
❷ Cable Catalog Number 1492-CAB❶R71 has only the N.O. contacts connected.

Note: Footnotes are on the following page.

The **I/O module-ready cables** have a wiring arm on one end to plug onto the front of a Bulletin 1771 I/O module and 20 or 40 individually colored #18 AWG conductors on the other end. These cables provide the convenience of pre-wired connections at the I/O module end, while still allowing the flexibility to field-wire to standard terminal blocks of your choice.

I/O Module-Ready Cables for 1771 Digital I/O Modules ❺

Cable Cat. No.	Standard Cable Lengths	Build-to-Order Available	No. of Conductors	Mating 1771 I/O Modules Catalog Number
1492-CABLE❸WA	1.0, 2.5, 5.0 m	Yes	12	1771-IA, -IA2, -IB, -IC, -IH, -IM, -IN, -IT, -IV, -OA, -OB, -OC, -OM, -ON, -OP
1492-CABLE❸WD	1.0, 2.5, 5.0 m	Yes	12	1771-ID, -ID01, -OD, -ODZ, -OR, -OW, -OYL, -OZL
1492-CABLE❸WH	1.0, 2.5, 5.0 m	Yes	20	1771-IAD, -IBD, -ICD, -IGD, -IMD, -IND, -OAD, -OBD, -OGD, -OMD, -OND
1492-CABLE❸WHF	1.0, 2.5, 5.0 m	Yes	20	1771-IBD ❹, -OAD ❹, -OBD ❹, -OMD ❹, -OND ❹
1492-CABLE❸WN	1.0, 2.5, 5.0 m	Yes	40	1771-IAN, -IBN, -ID16, -IQ16, -IVN, -OAN, -OBN, -OD16, -ODD, -OQ16, -OVN, -OW16, -OWN, -OWNA

❸ Cables are available in standard lengths of 1.0 m, 2.5 m, and 5.0 m. To order, insert the code for the desired cable length into the catalog number (010 = 1.0 m, 025 = 2.5 m, and 050 = 5.0 m). Example: **Catalog Number 1492-CABLE050WN** is for a 5.0 m cable with a pre-wired Catalog Number 1771-WN wiring arm on one end.

❹ Includes an optional 3 A fuse in the Wiring Arm for 1771 PLC mating I/O Modules.

❺ Discrete I/O ready cables should not be used with PLC analog I/O modules as a cable shield and drain wires are not provided.

Bulletin 1771 PLC-5 AIFMs and Cables

IFMs for Bulletin 1771 Analog I/O Modules

Description of AIFM	Catalog Number for Wiring System Module with Fixed Terminal Block	Catalog Number for Wiring System Module with Removable Terminal Block Socket Assembly (order plugs separately	I/O Module Catalog Number 1771-…								
			IFE (Differential)	IFE (Single-Ended)	IFF (Differential)	IFF (Single-Ended)	IL	IR	OFE1	OFE2	OFE3
Feed-through											
4-channel input, output or 2 in/2 out combination with 3 terminals/channel	1492-AIFM4-3	1492-RAIFM4-3❸	—	—	—	—	—	—	G	G	G
6-channel isolated with 3…4 terminals/channel	1492-AIFM6S-3	1492-RAIFM6S-3❹	—	—	—	—	—	J	—	—	—
8-channel differential 16-channel single-ended with 3 terminals/channel	1492-AIFM8-3	1492-RAIFM8-3❺	E	F	E	F	H	—	—	—	—
Thermocouple											
6-channel with 3 terminals/channel❷	1492-AIFM6TC-3	—	—	—	—	—	—	—	—	—	—
Fusible											
4-channel with 24V DC blown fuse indicators, test points, 5 terminals/input	1492-AIFM4I-F-5	—	—	—	—	—	—	—	—	—	—
2-channel/input, 2-channel/output with 24V DC blown fuse indicators, test points, 5 terminals/input, 3 terminals/ output	1492-AIFM4C-F-5	—	—	—	—	—	—	—	—	—	—
8-channel Input with 24V DC blown fuse indicators, 5 terminals/channel	1492-AIFM8-F-5	—	E	—	E	—	—	—	—	—	—

IFMs for Bulletin 1771 Analog I/O Modules (Continued)

Description of AIFM	Catalog Number for Wiring System Module with Fixed Terminal Block	Catalog Number for Wiring System Module with Removable Terminal Block Socket Assembly (order plugs separately	I/O Module Catalog Number 1771-…								
			IFE (Differential)	IFE (Single-Ended)	IFF (Differential)	IFF (Single-Ended)	IL	IR	OFE1	OFE2	OFE3
16-channel Input with 24V DC blown fuse indicators, 3 terminals/channel	1492-AIFM16-F-3	—	—	F	—	F	—	—	—	—	—
16-channel Input with 24V DC blown fuse indicators, 5 terminals/channel	1492-AIFM16-F-5	—	—	F	—	F	—	—	—	—	—
4-input /4-output channel with 8 fuses and 24V blown fuse indicators	1492-AIFMQS	—	—	—	—	—	—	—	—	—	—

❶ Cables are available in standard lengths of 0.5 m, 1.0 m, 2.5 m, and 5.0 m. To order, insert the code for the desired cable length into the catalog number 005 = 0.5 m (010 = 1.0 m, 025 = 2.5 m, and 050 = 5.0 m), and insert the letter in the box. Example: **Catalog Number 1492-ACABLE025H** is for a 2.5 m cable, and the letter H.
❷ Cannot be used with 1771 I/O.
❸ Compatible Removable Terminal Block (RTB) plug; 1492-RTB8N (screw style terminals) or 1492-RTB8P. ORDER PLUGS SEPARATELY.
❹ Compatible Removable Terminal Block (RTB) plug; 1492-RTB12N (screw style terminals) or 1492-RTB12P. ORDER PLUGS SEPARATELY.
❺ Compatible Removable Terminal Block (RTB) plug; 1492-RTB16N (screw style terminals) or 1492-RTB16P. ORDER PLUGS SEPARATELY.

These **pre-wired cables** have a wiring arm on one end to connect to the front of a Bulletin 1771 analog I/O module and a connector on the other end to plug into a 15- or 25-pin D-shell terminal AIFM. You must first select the AIFM from the preceding selection table

.

Pre-Wired Cables for Bulletin 1771 Analog I/O Modules

Cable Catalog Number	Standard Cable Lengths	Build-to-Order Available	AIFM Connector	Mating 1771 I/O Modules
1492-ACABLE❶E	0.5, 1.0, 2.5, 5.0 m	Yes	25-pin D-shell	1771-IFE, -IFF Differential
1492-ACABLE❶F	0.5, 1.0, 2.5, 5.0 m	Yes	25-pin D-shell	1771-IFE, -IFF Single-Ended
1492-ACABLE❶G	0.5, 1.0, 2.5, 5.0 m	Yes	15-pin D-shell	1771-OFE1, -OFE2, -OFE3
1492-ACABLE❶H	0.5, 1.0, 2.5, 5.0 m	Yes	25-pin D-shell	1771-IL
1492-ACABLE❶J	0.5, 1.0, 2.5, 5.0 m	Yes	25-pin D-shell	1771-IR

❶ Cables are available in standard lengths of 0.5 m, 1.0 m, 2.5 m, and 5.0 m. To order, insert the code for the desired cable length into the catalog number (005 = 0.5 m, 010 = 1.0 m, 025 = 2.5 m, and 050 = 5.0 m). Example: **Catalog Number 1492-ACABLE005E** is for a 0.5 m cable that could be used to connect a Catalog Number 1492-AIFM8-3 IFM to a Catalog Number 1771-IFE I/O module. Build-to-order lengths are also available.

Selection Tables, Continued

IFM-Ready I/O Cables

IFM-ready cables have a cable connector on one end to attach to the IFM and either 20 or 40 individually colored conductors on the other end (CABLE❶P and CABLE❶Q, respectively). These cables allow the IFM to be used in specialty applications that require a custom connection.

IFM-Ready I/O Cable

Cable Catalog Number	Standard Cable Lengths	Insulation Rating	No. Conductors	Conductor Size	Nominal Outer Diameter	Current/ Conductor	Compatible IFM Catalog Numbers
1492-CABLE❶P	1.0, 2.5, 5.0 m	300V, 80°C	20	22 AWG	9 mm (0.36 in.)	2 A	1492-IFM20…, 1492-XIM20…
1492-CABLE❶Q	1.0, 2.5, 5.0 m	300V, 80°C	40	22 AWG	11.7 mm (0.46 in.)	2 A	1492-IFM40…, 1492-XIM40…

❶ Cables are available in lengths of 1.0 m, 2.5 m, and 5.0 m. To order, insert the desired cable length into the catalog number (010 = 1.0 m, 025 = 2.5 m, and 050 = 5.0 m). Example: **Catalog Number 1492-CABLE025P** is for a 2.5 m, 20 conductor IFM-ready cable. Also refer to Build-to-Order Length Cables on page 65.

Build-to-Order Length Cables

Build-to-Order Length Cables

Cable Lengths	Increment Size	Cable Length Codes	Example Catalog Number
0.1…2.0 m	0.1 m	001…020	1492-CABLE015A (1.5 m cable)
2.0…10.0 m	0.5 m	020…100	1492-CABLE075P (7.5 m cable)
10.0…99.0 m	1.0 m	100…990	1492-CABLE150RTBB (15.0 m cable)

All Bulletin 1492 cables are available in build-to-order lengths. Consult your distributor for availability.

Selection Tables, Continued

Using PowerFlex 700H & 700S Drive Selection Tables to Make Valid 1492 Wiring System Module Catalog Numbers

Follow these steps when using the selection tables to make valid catalog numbers:

1. Find the appropriate table based on the PowerFlex 700H or 700 S control I/O module.
2. Find the column in the selected table for the I/O module.
3. Follow the column down to determine which Wiring System Modules are compatible with the I/O module as indicated by letter code. If there is no letter code, the Wiring System Module is not compatible with the I/O module. NOTE: The letter codes designate the compatible 1492 cable for that PowerFlex 700H or 700S control I/O and Wiring System Module combination.
4. Select the desired Wiring System Module.
5. Configure the cable catalog number using 1492-CAB❶ (for digital cables) or 1492-ACAB❶ (for analog cables). See footnote ❶ on pages 50 and 53.

PowerFlex 700H and 700S Drive IFMs, AIFMs and Cables

PowerFlex 700H and 700S drive Digital Control I/O

Description of 20-PIN IFM	Catalog Number for Wiring System Module with Fixed Terminal Block	Catalog Number for Wiring System Module with Removable Terminal Block Socket Assembly (order plugs separately)	700H Drive I/O Module		700S Drive I/O Module
			20C-DO1 & 20CDA1-A	20C-DO1 & 20CDA1-B	TB2
Feed-through					
Standard 264V AC/DC Max.	1492-IFM20F	1492-RIFM20F❶	A7H	B7H	A7S
Narrow standard 132V AC/DC Max.	1492-IFM20FN	1492-RIFM20FN❷	A7H	B7H	A7S
Extra terminals (2 per I/O) 264V AC/DC Max.	1492-IFM20F-2	1492-RIFM20F-2❶	A7H	B7H	A7S

❶ Compatible Removable Terminal Block (RTB plug; 1492-RTB20N (screwstyle terminals) or 1492-RTB20P. ORDER PLUGS SEPARATELY.

❷ Compatible Removable Terminal Block (RTB plug; 1492-RTB10N (screwstyle terminals) or 1492-RTB10P. ORDER PLUGS SEPARATELY.

These **pre-wired cables** have a pre-wired removable terminal block (RTB) on one end to connect to the PowerFlex 700H or PowerFlex 700S drive digital control I/O board terminal. There is a second connector on the other end to plug into a 20-pin IFM. You must first select the IFM from the table below.

Pre-Wired cables for PowerFlex 700H and 700S Drive Digital I/O

Cable Catalog Number	Standard Cable Length	Build-to-Order Available	Number of Conductors	Mating PowerFlex Control Board Cat. No or Terminal
1492-CAB❶A7H	0.5, 1.0, 2.5, 5.0 m	Yes	20	20C-DA1-A and 20C-DO1
1492-CAB❶B7H	0.5, 1.0, 2.5, 5.0 m	Yes	20	20C-DA1-B and 20C-DO1
1492-CAB❶A7S	0.5, 1.0, 2.5, 5.0 m	Yes	20	Terminal TB2

❶ Cables are available in standard lengths of 0.5 m, 1.0 m, 2.5 m, and 5.0 m. To order, insert the code for the desired cable length into the catalog number (005 = 0.5 m, 010 = 1.0 m, 025 = 2.5 m, and 050 = 5.0 m). Example: **Catalog Number 1492-CAB005A7H** is for a 0.5 m cable that could be used to connect a Catalog Number 1492-IFM20F IFM to a PowerFlex 700H drive 20C-DO1 and 20C-DA1-A module.

PowerFlex 700H and 700S Drive Analog Control I/O

Description of Analog IFM	Catalog Number for Wiring System Module with Fixed Terminal Block	Catalog Number for Wiring System Module with Removable Terminal Block Socket Assembly (order plugs separately)	700H Drive I/O Module	700S Drive I/O Module	
			20C-DA1-A or 20C-DA1-B	TB1 (Pins 1…12)	TB1 (Pins 13…24)
Feed-through					
6-channel isolated with 3…4 terminals/channel	1492-AIFM6S-3	1492-RIFM6S-3❶	Z7H	Z7S	
2-channel counter inputs with 4 output points	1492-AIFMCE4	—	—	—	X7S
2-channel fused counter inputs with 4 fused output points	1492-AIFMCE4-F	—	—	—	X7S

❶ Compatible Removable Terminal Block (RTB) plug; 1492-RTB12N (screw style terminals) or 1492-RTB12P (push-in style terminals, available August 2007). ORDER PLUGS SEPARATELY.These pre-wired cables have a pre-wired removable terminal block (RTB) on one end to connect to the PowerFlex 700H or PowerFlex 700S drive analog control I/O board terminal. There is a 25-pin D-shell connector on the other end to plug into the mating AIFM module terminal. You must first select the AIFM from the table below.

Pre-Wired Cables for PowerFlex 700H and 700S Drive Analog I/O

Cable Catalog Number	Standard Cable Length	Build-to-Order Available	Number of Conductors	Mating PowerFlex Control Board Cat. No or Terminal
1492-ACAB❶Z7H	0.5, 1.0, 2.5, 5.0 m	Yes	25-Pin D-Shell	20C-DA1-A or 20C-DA1-B I/O board
1492-ACAB❶Z7S	0.5, 1.0, 2.5, 5.0 m	Yes	25-Pin D-Shell	Terminal TB1 (DINS 1…12)
1492ACAB❶Z7S	0.5, 1.0, 2.5, 5.0 m	Yes	25-Pin D-Shell	Terminal TB2 (DINS 13…24)

❶ Cables are available in standard lengths of 0.5 m, 1.0 m, 2.5 m, and 5.0 m. To order, insert the code for the desired cable length into the catalog number (005 = 0.5 m, 010 = 1.0 m, 025 = 2.5 m, and 050 = 5.0 m). Example: **Catalog Number 1492-ACAB005Z7S** is for a 0.5 m cable that could be used to connect a Catalog Number 1492-AIFM6S-3 analog IFM to a PowerFlex 700S drive analog terminal I/O.

Digital IFM Specifications

IFM Catalog Number	Page No. for Application Notes and Pinout	Page No. for Specifications	IFM Catalog Number	Page No. for Application Notes and Pinout	Page No. for Specifications	IFM Catalog Number	Page No. for Application Notes and Pinout	Page No. for Specifications
1492-IFM20F, -RIFM20F	70	187	1492-IFM20D240A-2	76	188	1492-IFM40DS120A-4	100	186
1492-IFM20F-2, -RIFM20F-2	71	187	1492-IFM20F-F240-2	82	188	1492-IFM40F-F120-2	106	187
1492-IFM20F-3	71	187	1492-IFM20F-FS240-4	88	188	1492-IFM40F-FS120-2, -RIFM40F-FS120-2	110	187
1492-IFM20FN, -RIFM20FN	70	187	1492-IFM20DS24-4	78	188	1492-IFM40F-FS120-4, -RIFM40F-FS120-4	111	187
—	—	—	1492-IFM20F-F-2, -RIFM20F-F-2	80	188	1492-IFM40F-FS120A-4, -RIFM40F-FS120A-4	114	187
1492-IFM20D24N	72	187	1492-IFM20F-FS-2	83	188	1492-IFM40DS240A-4	101	186
1492-IFM20D24-2	74	187	1492-IFM40F, -RIFM40F	89	188	1492-IFM40F-FS240-4	112	187
1492-IFM20D24A-2	74	187	1492-IFM40F-2, -RIFM40F-2	89	188	1492-XIM4024-16R, -RXIM4024-16R	123	188
1492-IFM20D24-3	77	187	1492-IFM40F-F-2	102	188	1492-XIM4024-16RF	126	188
1492-IFM20F-F24-2, -RIFM20F-F24-2	80	187	1492-IFM40F-FS-2	107	188	1492-XIM4024-8R	122	188
1492-IFM20F-F24A-2, -RIFM20F-F24A-2	81	187	1492-IFM40F-FSA-4	114	188	1492-XIM2024-8R	115	188
1492-IFM20F-FS24-2	83	187	1492-IFM40F-FS-4	108	189	1492-XIM2024-16R	118	188
1492-IFM20F-FS24A-4	84	187	1492-IFM40F-3	90	189	1492-XIM2024-16RF	119	188
1492-IFM20D120	73	187	1492-IFM40DS24-4	97	189	1492-XIM24-8R, -RXIM24-8R	127	188
1492-IFM20D120N	73	187	1492-IFM40D24, -RIFM40D24	91	189	1492-XIM24-16RF	131	188
1492-IFM20D120-2	75	187	1492-IFM40D24-2	92	189	1492-XIMF-F24-2	132	188
1492-IFM20D120A-2	75	187	1492-IFM40D24A-2, -RIFM40D24A-2	93	189	1492-XIM20120-16R	120	188
1492-IFM20DS120-4	79	187	1492-IFM40D24-3	96	189	1492-XIM20120-16RF	121	188
1492-IFM20F-F120-2, -RIFM20F-F120-2	81	187	1492-IFM40DS24A-4	98	189	1492-XIM20120-8R	117	188
1492-IFM20F-F120A-2, -RIFM20F-F120A-2	82	187	1492-IFM40F-F24-2, -RIFM40F-F24-2	103	189	1492-XIM120-8R	129	188
1492-IFM20F-FS120-2,	85	187	1492-IFM40F-FS24-2	107	189	1492-XIMF-F120-2	134	188
1492-IFM20F-FS120-4	86	187	1492-IFM40D120A-2	95	189	1492-XIMF-2	136	188
1492-IFM20F-FS120A-4	87	187	1492-IFM40D120-2	94	189	—	—	—
1492-IFM20D240-2	76	187	1492-IFM40DS120-4	99	189	—	—	—

For all IFM dimensions, refer to page 180.

For general Adhesive Label Card information, refer to page 181.

For Field-Side Wiring Diagrams, refer to the Wiring System web page at **http://www.ab.com/catalogs/RAISE**. Refer to page 186 for specific platform web site information. Refer to the online documentation for new product information.

Symbols and Terminal Identification Conventions Used Throughout the Pinout Section

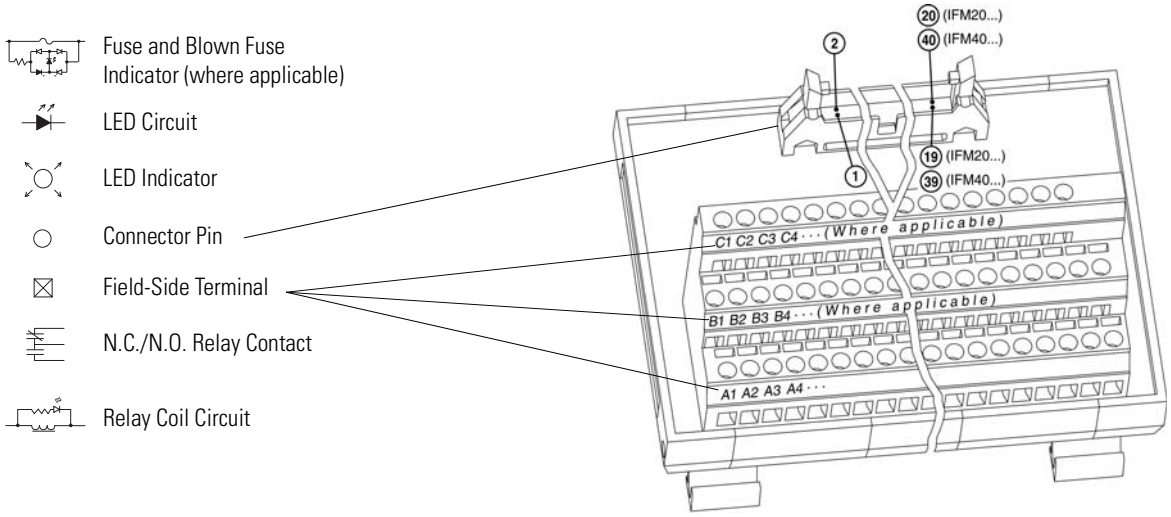

1492-IFM20F
1492-RIFM20F

Feed-Through Standard 264V AC/DC Max.

Application Notes

1. **Compatibility —** To ensure proper operation with the I/O module, do **not** exceed the voltage and current ratings of the IFM.
2. **Wiring —** Refer to the Label Section on page 181. For Field-Side Wiring Diagrams, refer to the Wiring System web site information on page 186.
3. **Dimensions —** Refer to page 187.

Pinout

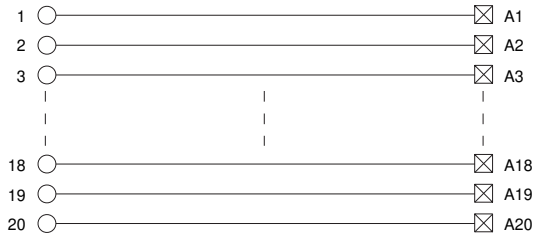

1492-IFM20FN
1492-RIFM20FN

Feed-Through Narrow Standard 132V AC/DC Max.

Application Notes

1. **Compatibility** — To ensure proper operation with the I/O module, do **not** exceed the voltage and current ratings of the IFM.
2. **Wiring —** Refer to the Label Section on page 181. For Field-Side Wiring Diagrams, refer to the Wiring System web site information on page 186.
3. **Dimensions —** Refer to page 187.

Pinout

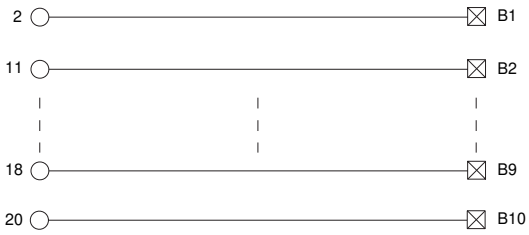

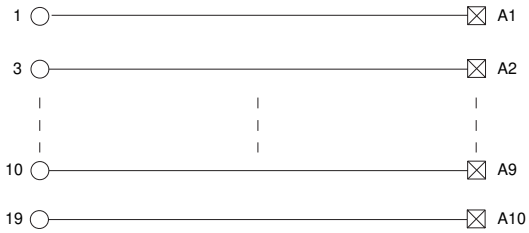

1492-IFM20F-2
1492-RIFM20F-2

Feed-Through Extra Terminals (2 per I/O) 264V AC/DC Max.

Application Notes

1. **Compatibility —** To ensure proper operation with the I/O module, do **not** exceed the voltage and current ratings of the IFM.
2. **Wiring —** Refer to the Label Section on page 181. For Field-Side Wiring Diagrams, refer to the Wiring System web site information on page 186.
3. **Isolation —** The power bus is isolated into two groups of 10 terminals. This allows each group of the I/O devices to reference a different power source.
4. **Dimensions —** Refer to page 187.

Pinout

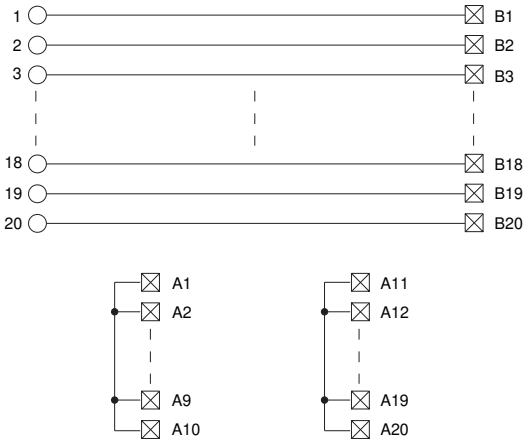

1492-IFM20F-3

Feed-Through 3-Wire Sensor Type Input Devices 132V AC/DC Max.

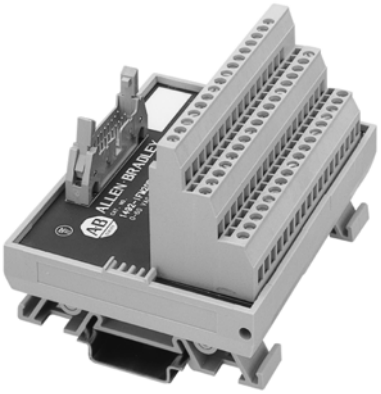

Application Notes

1. **Compatibility —** To ensure proper operation with the I/O module, do **not** exceed the voltage and current ratings of the IFM.
2. **Wiring —** Refer to the Label Section on page 181. For Field-Side Wiring Diagrams, refer to the Wiring System web site information on page 186.
3. **Isolation —** The power busses are connected to one common (one bus has 17 terminals, and one bus has 18 terminals). All of the input devices used must reference the same power source.
4. **Dimensions —** Refer to page 187.

Pinout

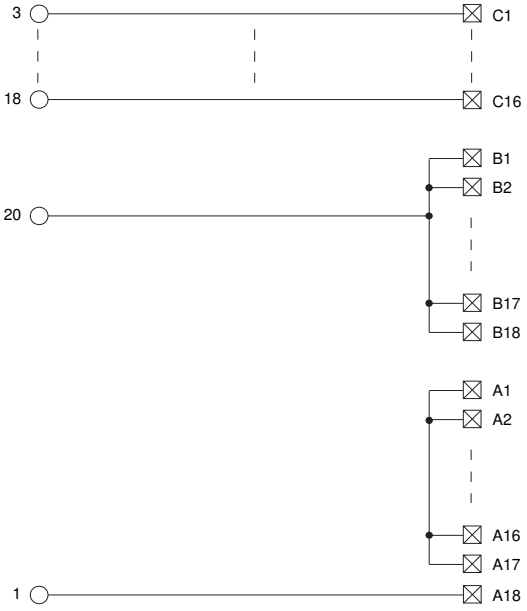

1492-IFM20D24

LED Indicating Standard with 24V AC/DC LEDs

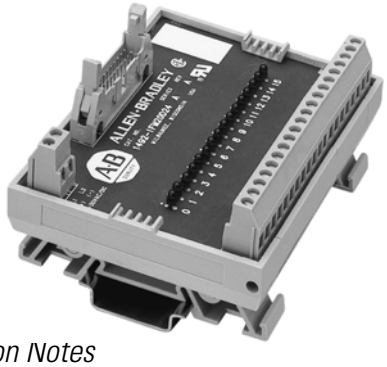

Application Notes

1. **Compatibility —** To ensure proper operation with the I/O module, do **not** exceed the voltage and current ratings of the IFM. When this IFM is used with a hard contact (relay) output circuit that switches an inductive load, surge suppression must be used (e.g., a 1N4004 diode reverse-wired across a DC load).
2. **Wiring —** The LEDs are powered from the two-position terminal block. Make only one connection to the power source for normal operation. Refer to the Label Section on page 181. For Field-Side Wiring Diagrams, refer to the Wiring System web site information on page 186.
3. **Isolation —** The LEDs are broke into two separate groups. Group 1 is commoned at terminal "Test 0-7" and Group 2 is commoned at terminal "Test 8-15."
4. **Dimensions —** Refer to page 187.

Pinout

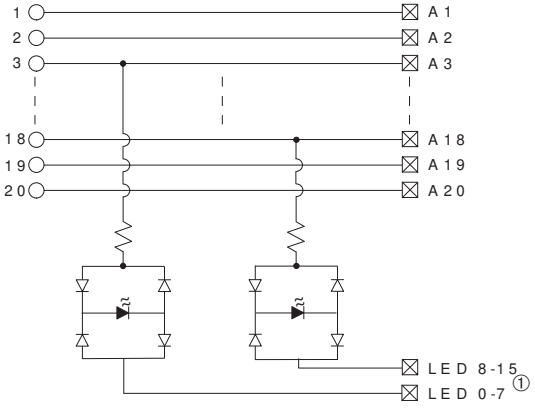

1492-IFM20D24N

LED Indicating Narrow Standard with 24V AC/DC LEDs

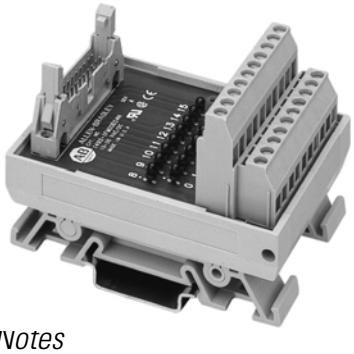

Application Notes

1. **Compatibility —** To ensure proper operation with the I/O module, do **not** exceed the voltage and current ratings of the IFM. When this IFM is used with a hard contact (relay) output circuit that switches an inductive load, surge suppression must be used (e.g., a 1N4004 diode reverse-wired across a DC load).
2. **Wiring —** Refer to the Label Section on page 181. For Field-Side Wiring Diagrams, refer to the Wiring System web site information on page 186.
3. **Isolation —** The LEDs are connected to one common. All of the I/O devices must reference the same power source.
4. **Dimensions —** Refer to page 187.

Pinout

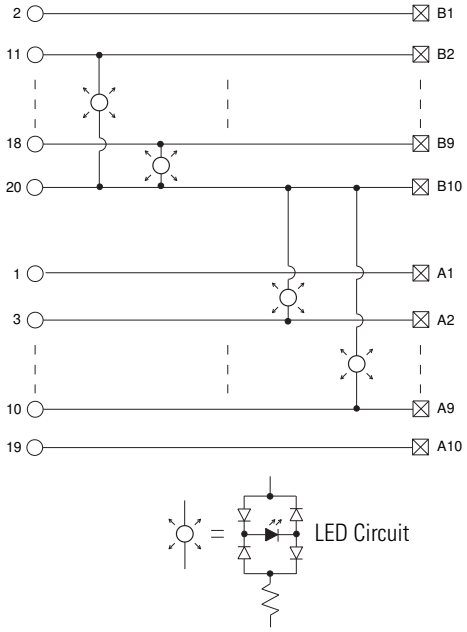

1492-IFM20D120

LED Indicating Standard with 120V AC/DC LEDs

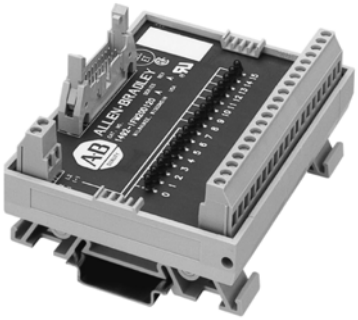

Application Notes

1. **Compatibility —** To ensure proper operation with the I/O module, do **not** exceed the voltage and current ratings of the IFM. This IFM is not recommended for use with input devices or programmable controller output circuits having an off-state leakage current exceeding 0.5 mA. Use Cat. No. 1492-IFM20D120N instead, or use Cat. No. 1492-IFM20D120A-2 for input modules and Cat. No. 1492-IFM20D120-2 for output modules. When this IFM is used with a hard contact (relay) output circuit that switches an inductive load, surge suppression must be used (e.g., a 1N4004 diode reverse-wired across a DC load).
2. **Wiring —** Refer to the Label Section on page 181. For Field-Side Wiring Diagrams, refer to the Wiring System web site information on page 186.
3. **Isolation —** The LEDs are isolated into two groups of eight terminals. This allows each group of the I/O devices to reference a different power source.
4. **Dimensions —** Refer to page 187.

Pinout

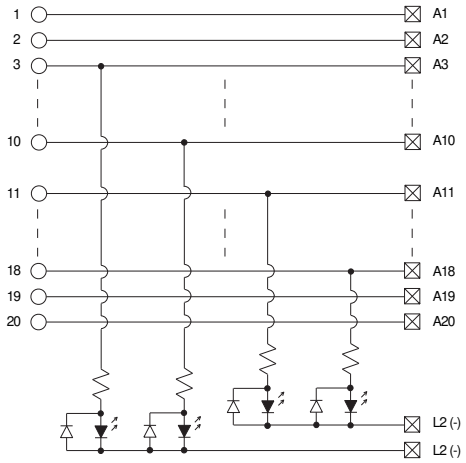

1492-IFM20D120N

LED Indicating Narrow Standard with 120V AC LEDs

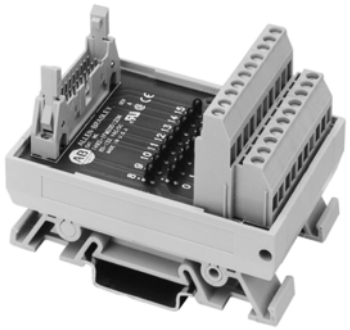

Application Notes

1. **Compatibility —** To ensure proper operation with the I/O module, do **not** exceed the voltage and current ratings of the IFM. When this IFM is used with a hard contact (relay) output circuit that switches an inductive load, surge suppression must be used (e.g., a 1N4004 diode reverse-wired across a DC load).
2. **Wiring —** Refer to the Label Section on page 181. For Field-Side Wiring Diagrams, refer to the Wiring System web site information on page 186.
3. **Isolation —** The LEDs are connected to one common. All of the I/O devices must reference the same power source.
4. **Dimensions —** Refer to page 187.

Pinout

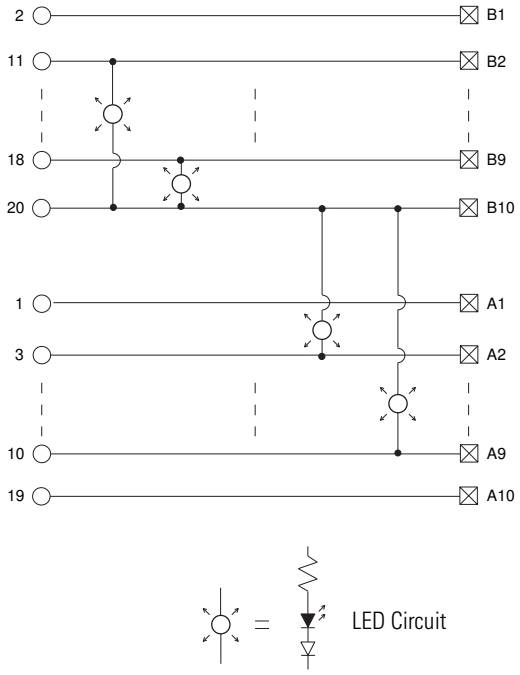

1492-IFM20D24-2

LED Indicating 24V AC/DC LEDs & Extra Terminals for Outputs

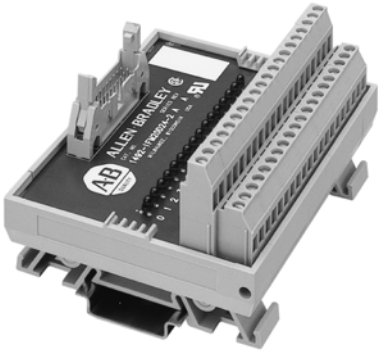

Application Notes

1. **Compatibility —** To ensure proper operation with the I/O module, do **not** exceed the voltage and current ratings of the IFM. When this IFM is used with a hard contact (relay) output circuit that switches an inductive load, surge suppression must be used (e.g., a 1N4004 diode reverse-wired across a DC load).
2. **Wiring —** Refer to the Label Section on page 181. For Field-Side Wiring Diagrams, refer to the Wiring System web site information on page 186.
3. **Isolation —** The power bus and LEDs are isolated into two groups of 10 terminals (eight LEDs). This allows each group of output devices to reference a different power source.
4. **Dimensions —** Refer to page 187.

Pinout

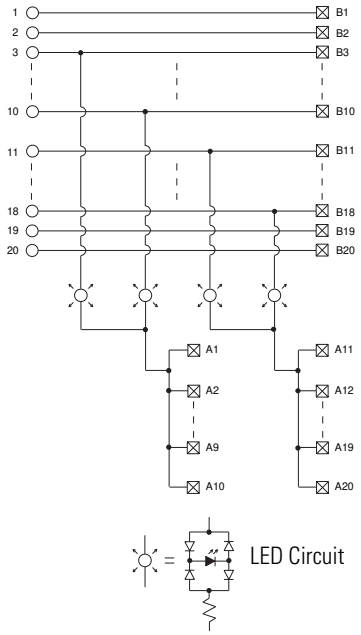

1492-IFM20D24A-2

LED Indicating 24V AC/DC LEDs & Extra Terminals for Inputs

Application Notes

1. **Compatibility —** To ensure proper operation with the I/O module, do **not** exceed the voltage and current ratings of the IFM. When this IFM is used with a hard contact (relay) output circuit that switches an inductive load, surge suppression must be used (e.g., a 1N4004 diode reverse-wired across a DC load).
2. **Wiring —** Refer to the Label Section on page 181. For Field-Side Wiring Diagrams, refer to the Wiring System web site information on page 186.
3. **Isolation —** The power bus comprises 20 terminals connected together. The LEDs are connected to one common. All of the I/O devices must reference the same power source.
4. **Dimensions —** Refer to page 187.

Pinout

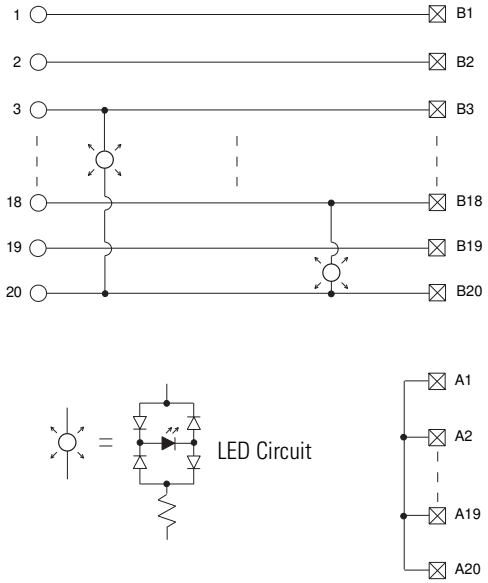

1492-IFM20D120-2

LED Indicating 120V AC LEDs & Extra Terminals for Outputs

Application Notes

1. **Compatibility —** To ensure proper operation with the I/O module, do **not** exceed the voltage and current ratings of the IFM. When this IFM is used with a hard contact (relay) output circuit that switches an inductive load, surge suppression must be used (e.g., an MOV wired across an AC load).
2. **Wiring —** Refer to the Label Section on page 181. For Field-Side Wiring Diagrams, refer to the Wiring System web site information on page 186.
3. **Isolation —** The power bus and LEDs are isolated into two groups of 10 terminals (8 LEDs). This allows each group of output devices to reference a different power supply.
4. **Dimensions —** Refer to page 187.

Pinout

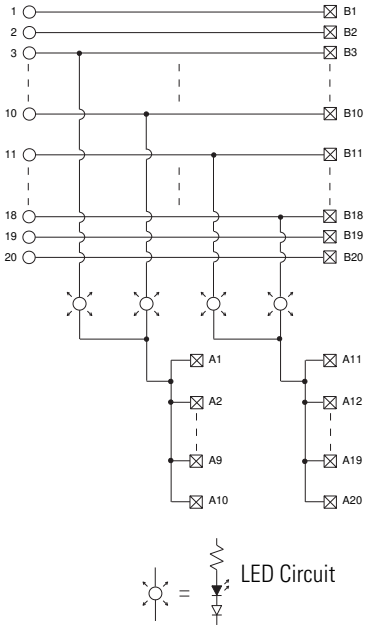

1492-IFM20D120A-2

LED Indicating 120V AC LEDs & Extra Terminals for Inputs

Application Notes

1. **Compatibility —** To ensure proper operation with the I/O module, do **not** exceed the voltage and current ratings of the IFM. When this IFM is used with a hard contact (relay) output circuit that switches an inductive load, surge suppression must be used (e.g., an MOV wired across an AC load).
2. **Wiring —** Refer to the Label Section on page 181. For Field-Side Wiring Diagrams, refer to the Wiring System web site information on page 186.
3. **Isolation —** The power bus comprises 20 terminals connected together. The LEDs are connected to one common. All of the I/O devices must reference the same power source.
4. **Dimensions —** Refer to page 187.

Pinout

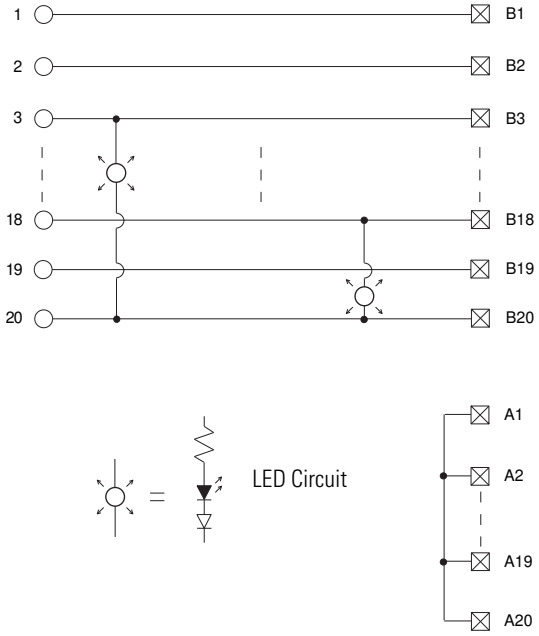

1492-IFM20D240-2

LED Indicating 240V AC LEDs & Extra Terminals for Outputs

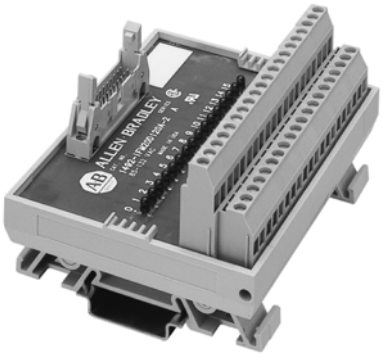

Application Notes

1. **Compatibility —** To ensure proper operation with the I/O module, do **not** exceed the voltage and current ratings of the IFM. When this IFM is used with a hard contact (relay) output circuit that switches an inductive load, surge suppression must be used (e.g., an MOV wired across an AC load).
2. **Wiring —** Refer to the Label Section on page 181. For Field-Side Wiring Diagrams, refer to the Wiring System web site information on page 186.
3. **Isolation —** The power bus and LEDs are isolated into two groups of 10 terminals (8 LEDs). This allows each group of output devices to reference a different power supply.
4. **Dimensions —** Refer to page 187.

Pinout

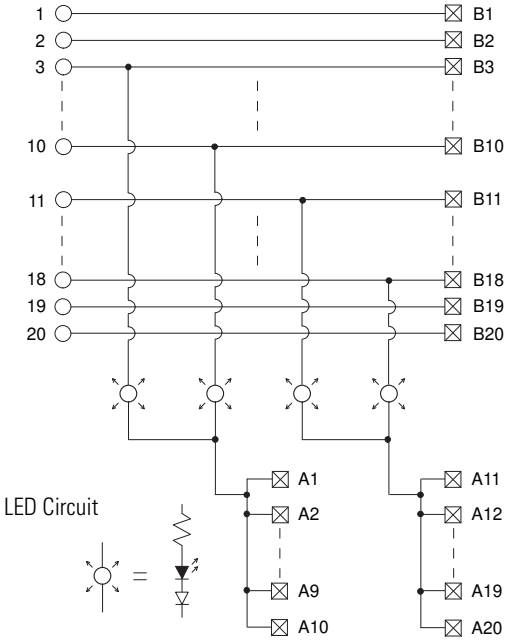

1492-IFM20D240A-2

LED Indicating 120V AC LEDs & Extra Terminals for Inputs

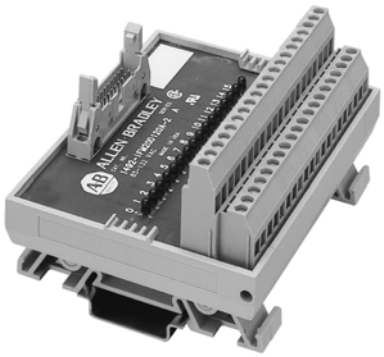

Application Notes

1. **Compatibility —** To ensure proper operation with the I/O module, do **not** exceed the voltage and current ratings of the IFM. When this IFM is used with a hard contact (relay) output circuit that switches an inductive load, surge suppression must be used (e.g., an MOV wired across an AC load).
2. **Wiring —** Refer to the Label Section on page 181. For Field-Side Wiring Diagrams, refer to the Wiring System web site information on page 186.
3. **Isolation —** The power bus comprises 20 terminals connected together. The LEDs are connected to one common. All of the I/O devices must reference the same power source.
4. **Dimensions —** Refer to page 187.

Pinout

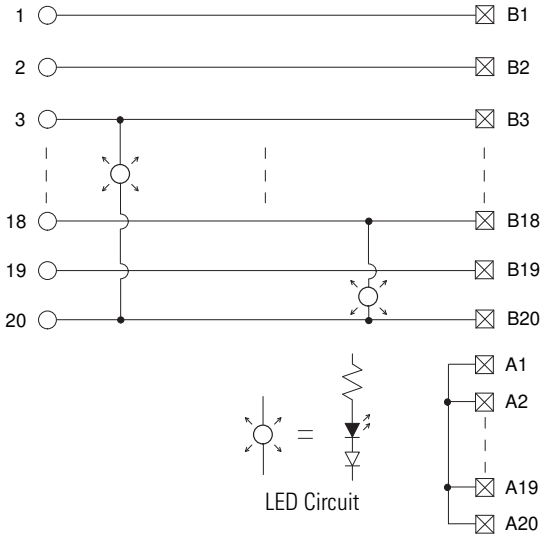

1492-IFM20D24-3

LED Indicating 3-Wire Sensor with 24V AC/DC LEDs

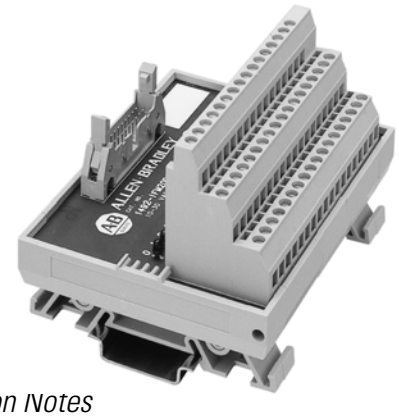

Application Notes

1. **Compatibility —** To ensure proper operation with the I/O module, do **not** exceed the voltage and current ratings of the IFM. When this IFM is used with a hard contact (relay) output circuit that switches an inductive load, surge suppression must be used.
2. **Wiring —** Refer to the Label Section on page 181. For Field-Side Wiring Diagrams, refer to the Wiring System web site information on page 186.
3. **Isolation —** The LEDs are connected to one common. All of the field input devices must reference the same power source.
4. **Dimensions —** Refer to page 187.

Pinout

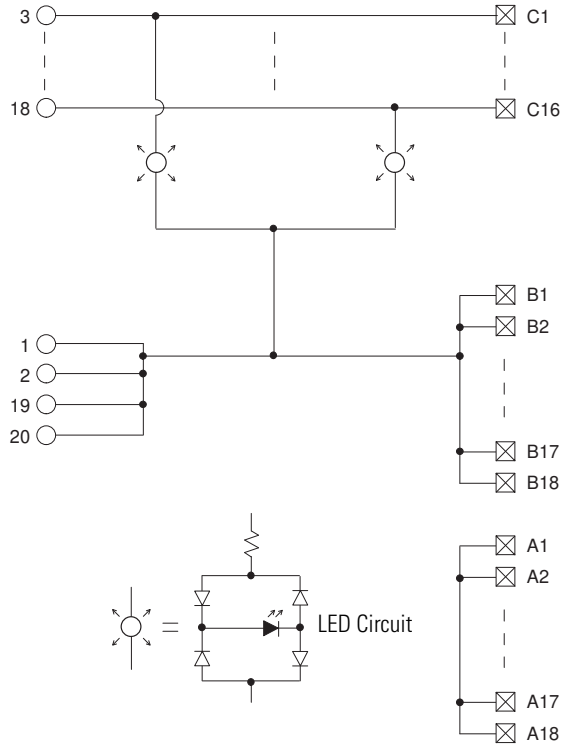

1492-IFM20DS24-4

LED Indicating 8 Individually Isolated with 24/48V AC/DC LEDs & 4 Terminals/Output

Application Notes

1. **Compatibility —** To ensure proper operation with the I/O module, do **not** exceed the voltage and current ratings of the IFM. When this IFM is used with a hard contact (relay) output circuit that switches an inductive load, surge suppression must be used.
2. **Wiring —** Refer to the Label Section on page 181. For Field-Side Wiring Diagrams, refer to the Wiring System web site information on page 186.
3. **Isolation —** There are eight individually isolated channels. LED returns are individually isolated.
4. **Extra Terminals —** Two field-side terminals are internally connected on the IFM for each channel, and are available for power source common connections.
5. **Dimensions —** Refer to page 187.

Pinout

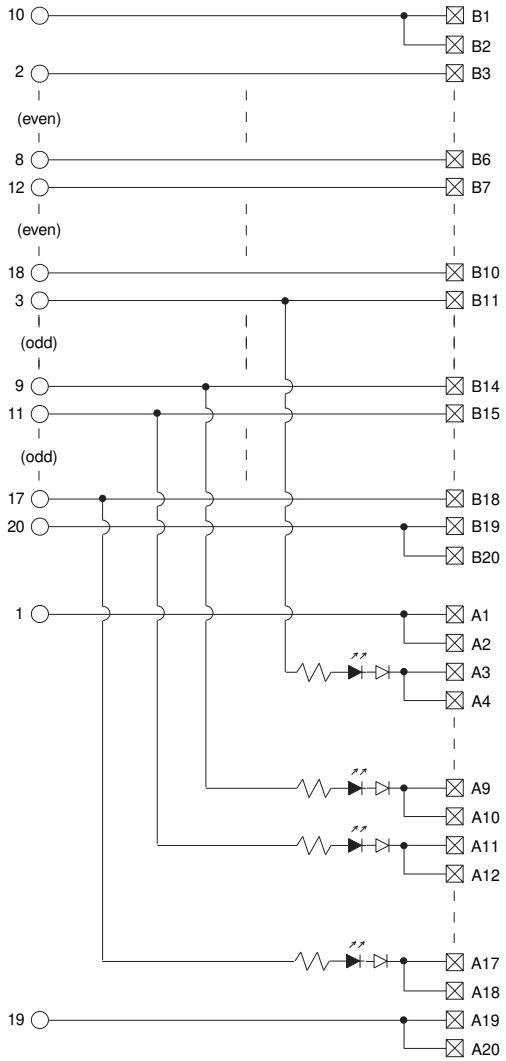

1492-IFM20DS120-4

LED Indicating 8 Individually Isolated with 120V AC LEDs & 4 Terminals/Output

Application Notes

1. **Compatibility —** To ensure proper operation with the I/O module, do **not** exceed the voltage and current ratings of the IFM. When this IFM is used with a hard contact (relay) output circuit that switches an inductive load, surge suppression must be used (e.g., an MOV wired across an AC load).
2. **Wiring —** Refer to the Label Section on page 181. For Field-Side Wiring Diagrams, refer to the Wiring System web site information on page 186.
3. **Isolation —** There are eight individually isolated channels. LED returns are individually isolated.
4. **Extra Terminals —** Two field-side terminals are internally connected on the IFM for each channel, and are available for power source common connections.
5. **Dimensions —** Refer to page 187.

Pinout

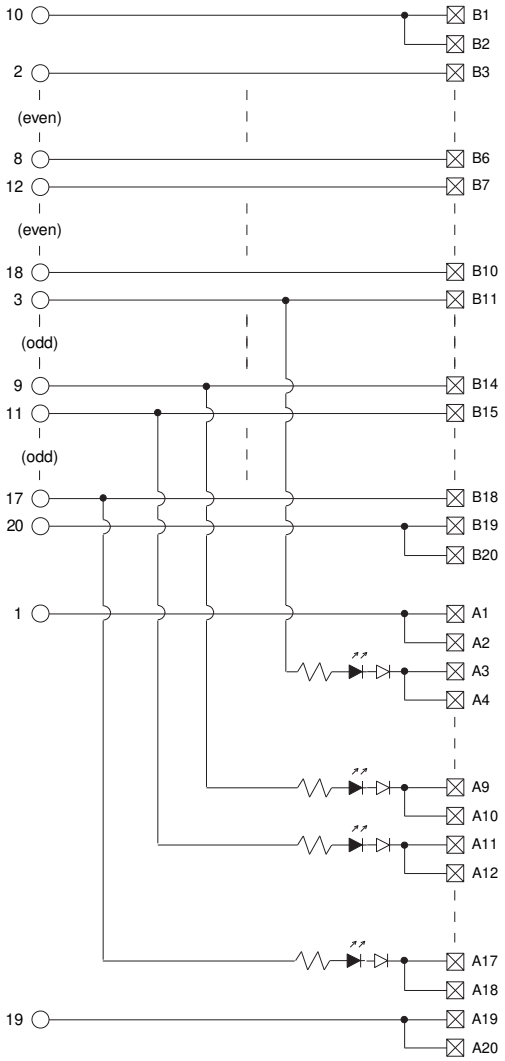

1492-IFM20F-F-2
1492-RIFM20F-F-2

Fusible Extra Terminals for Outputs

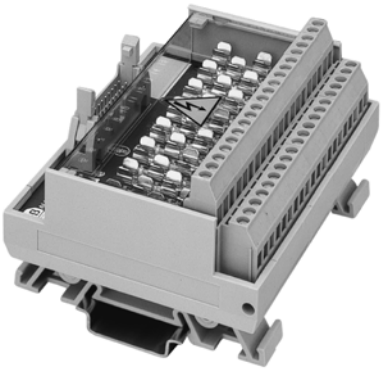

Application Notes

1. **Compatibility —** To ensure proper operation with the I/O module, do **not** exceed the voltage and current ratings of the IFM.
2. **Wiring —** Refer to the Label Section on page 181. For Field-Side Wiring Diagrams, refer to the Wiring System web site information on page 186.
3. **Fusing —** Fuse holders are included with the IFM. Fuses (5 x 20 mm) are not included.
4. **Isolation —** The power bus and fuse clips are isolated into two groups of 10 terminals (eight fuse clips). This allows each group of output devices to reference a different power source.
5. **Dimensions —** Refer to page 187.

Pinout

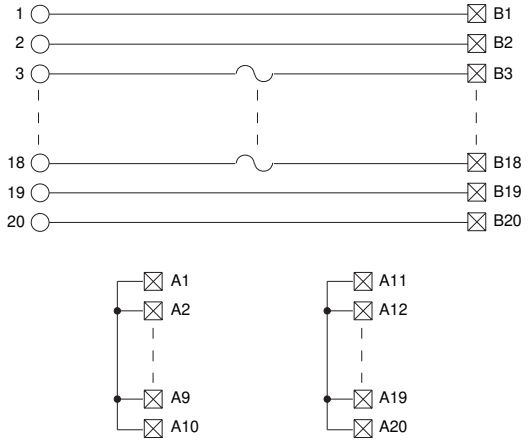

1492-IFM20F-F24-2
1492-RIFM20F-F24-2

Fusible Extra Terminals with 24V AC/DC Blown Fuse Indicators

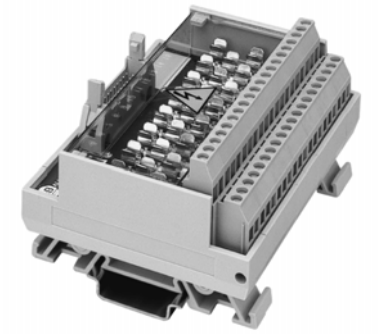

Application Notes

1. **Compatibility —** To ensure proper operation with the I/O module, do **not** exceed the voltage and current ratings of the IFM. When this IFM is used with a hard contact (relay) output circuit that switches an inductive load, surge suppression must be used.
2. **Wiring —** Refer to the Label Section on page 181. For Field-Side Wiring Diagrams, refer to the Wiring System web site information on page 186.
3. **Fusing —** Fuse holders are included with the IFM. Fuses (5 x 20 mm) are not included.
4. **Isolation —** The power bus, fuse clips, and blown fuse indicators are isolated into two groups of 10 terminals (eight fuse clips and blown fuse indicators). This allows each group of output devices to reference a different power source.
5. **Dimensions —** Refer to page 187.

Pinout

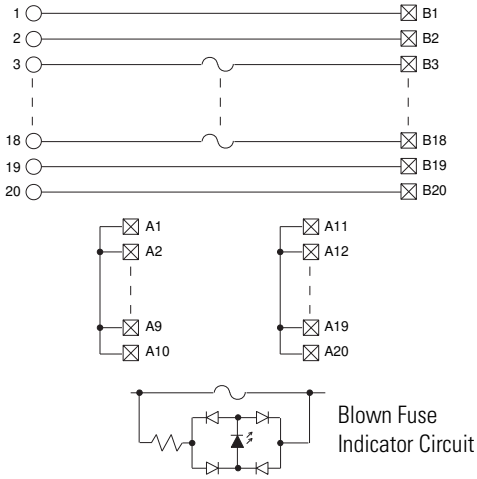

1492-IFM20F-F24A-2
1492-RIFM20F-F24A-2

Fusible Extra Terminals with 24V AC/DC Blown Fuse Indicators

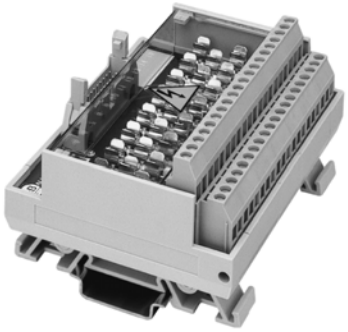

Application Notes

1. **Compatibility —** To ensure proper operation with the I/O module, do **not** exceed the voltage and current ratings of the IFM.
2. **Wiring —** Refer to the Label Section on page 181. For Field-Side Wiring Diagrams, refer to the Wiring System web site information on page 186.
3. **Fusing —** Fuse holders are included with the IFM. Fuses (5 x 20 mm) are not included.
4. **Isolation —** The power bus, fuse clips, and blown fuse indicators are isolated into two groups of 10 terminals (eight fuse clips and blown fuse indicators). This allows each group of input devices to reference a different power source.
5. **Dimensions —** Refer to page 187.

Pinout

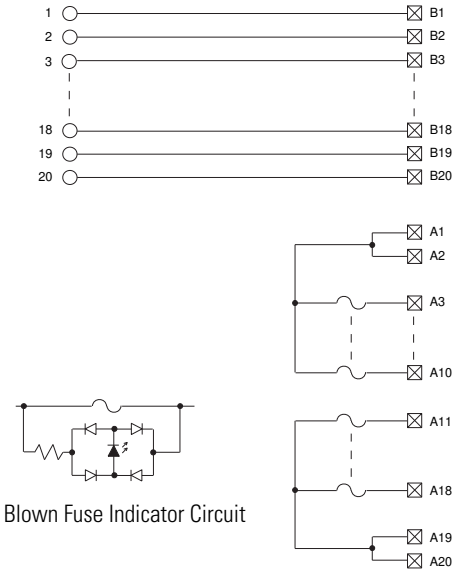

1492-IFM20F-F120-2
1492-RIFM20F-F120-2

Fusible Extra Terminals with 120V AC/DC Blown Fuse Indicators

Application Notes

1. **Compatibility —** To ensure proper operation with the I/O module, do **not** exceed the voltage and current ratings of the IFM. When this IFM is used with a hard contact (relay) output circuit that switches an inductive load, surge suppression must be used (e.g., an MOV wired across an AC load).
2. **Wiring —** Refer to the Label Section on page 181. For Field-Side Wiring Diagrams, refer to the Wiring System web site information on page 186.
3. **Fusing —** Fuse holders are included with the IFM. Fuses (5 x 20 mm) are not included.
4. **Isolation —** The power bus, fuse clips, and blown fuse indicators are isolated into two groups of 10 terminals (eight fuse clips and blown fuse indicators). This allows each group of output devices to reference a different power source.
5. **Dimensions —** Refer to page 187.

Pinout

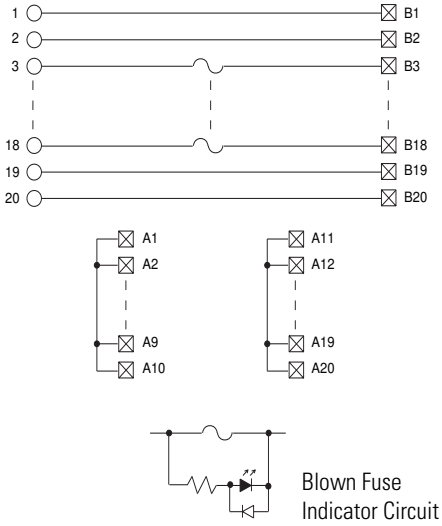

1492-IFM20F-F120A-2
1492-RIFM20F-F120A-2

Fusible Extra Terminals with 120V AC/DC Blown Fuse Indicators

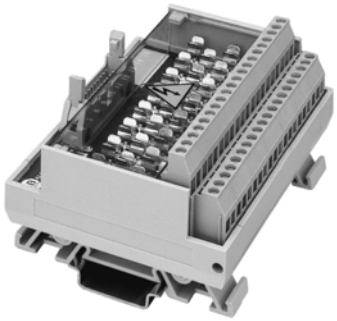

Application Notes

1. **Compatibility —** To ensure proper operation with the I/O module, do **not** exceed the voltage and current ratings of the IFM.
2. **Wiring —** Refer to the Label Section on page 181. For Field-Side Wiring Diagrams, refer to the Wiring System web site information on page 186.
3. **Fusing —** Fuse holders are included with the IFM. Fuses (5 x 20 mm) are not included.
4. **Isolation —** The power bus, fuse clips, and blown fuse indicators are isolated into two groups of 10 terminals (eight fuse clips and blown fuse indicators). This allows each group of input devices to reference a different power source.
5. **Dimensions —** Refer to page 187.

Pinout

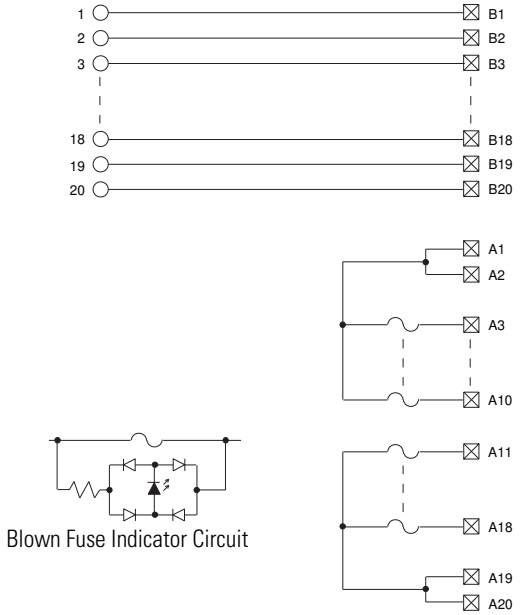

1492-IFM20F-F240-2

Fusible Extra Terminals with 240V AC/DC Blown Fuse Indicators

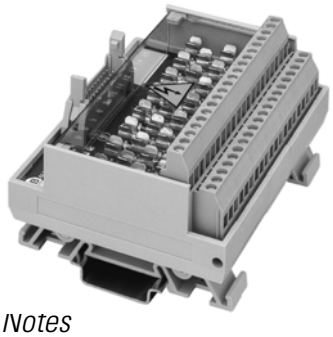

Application Notes

1. **Compatibility —** To ensure proper operation with the I/O module, do **not** exceed the voltage and current ratings of the IFM.
2. **Wiring —** Refer to the Label Section on page 181. For Field-Side Wiring Diagrams, refer to the Wiring System web site information on page 186.
3. **Fusing —** Fuse holders are included with the IFM. Fuses (5 x 20 mm) are not included.
4. **Isolation —** The power bus, fuse clips, and blown fuse indicators are isolated into two groups of 10 terminals (eight fuse clips and blown fuse indicators). This allows each group of output devices to reference a different power source.
5. **Dimensions —** Refer to page 187.

Pinout

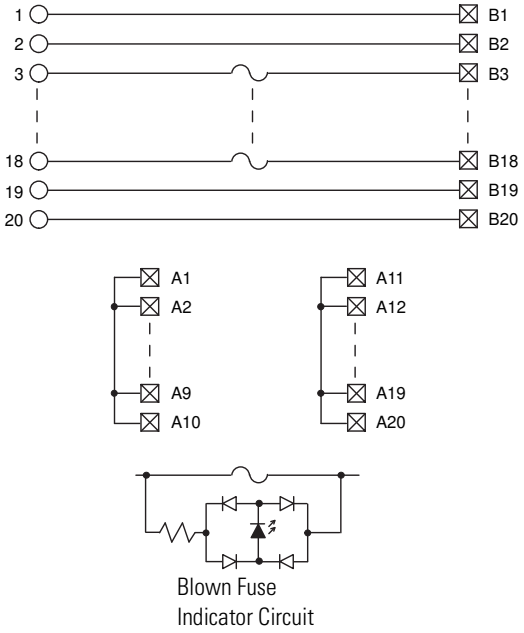

1492-IFM20F-FS-2

Fusible 8 Individually Isolated 120V AC/DC with Extra Terminals for Outputs

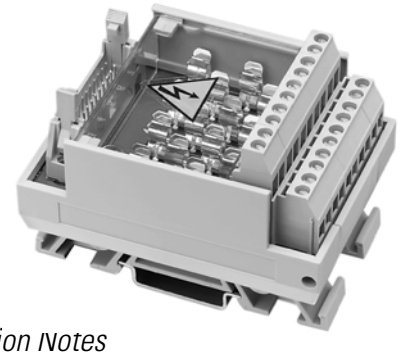

Application Notes

1. **Compatibility —** To ensure proper operation with the I/O module, do **not** exceed the voltage and current ratings of the IFM.
2. **Wiring —** Refer to the Label Section on page 181. For Field-Side Wiring Diagrams, refer to the Wiring System web site information on page 186.
3. **Fusing —** Fuse holders are included with the IFM. Fuses (5 x 20 mm) are not included.
4. **Isolation —** The fuse clips are isolated into eight groups of terminals. This allows each output device to reference a different power source.
5. **Dimensions —** Refer to page 187.

Pinout

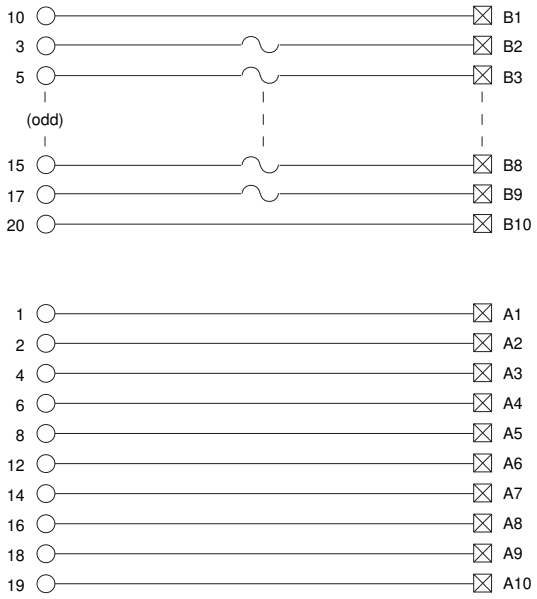

1492-IFM20F-FS24-2

Fusible 8 Individually Isolated with Extra Terminals and 24V AC/DC Blown Fuse Indicators

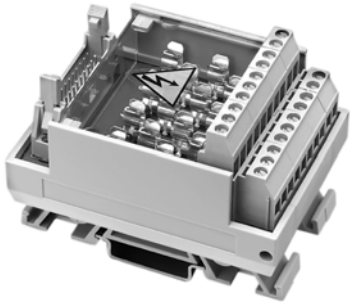

Application Notes

1. **Compatibility —** To ensure proper operation with the I/O module, do **not** exceed the voltage and current ratings of the IFM. When this IFM is used with a hard contact (relay) output circuit that switches an inductive load, surge suppression must be used (e.g., a 1N4004 diode reverse-wired across a DC load).
2. **Wiring —** Refer to the Label Section on page 181. For Field-Side Wiring Diagrams, refer to the Wiring System web site information on page 186.
3. **Fusing —** Fuse holders are included with the IFM. Fuses (5 x 20 mm) are not included.
4. **Isolation —** The fuse clips and blown fuse indicators are isolated into eight groups of terminals. This allows each output device to reference a different power source.
5. **Dimensions —** Refer to page 187.

Pinout

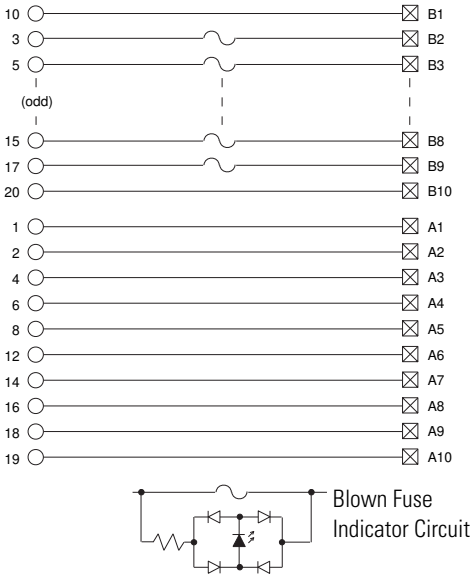

1492-IFM20F-FS24A-4

Fusible Two 4-Point Isolated Groups with 4 Terminals/Input and 24V AC/DC Blown Fuse LED Indicators

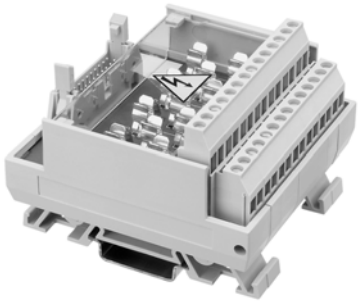

Application Notes

1. **Compatibility —** To ensure proper operation with the I/O module, do **not** exceed the voltage and current ratings of the IFM. When this IFM is used with a hard contact (relay) output circuit that switches an inductive load, surge suppression must be used (e.g., a 1N4004 diode reverse-wired across a DC load).
2. **Wiring —** Refer to the Label Section on page 181. For Field-Side Wiring Diagrams, refer to the Wiring System web site information on page 186.
3. **Fusing —** Fuse holders are included with the IFM. Fuses (5 x 20 mm) are not included.
4. **Isolation —** The fuse clips and blown fuse indicators are isolated into two groups of terminals. This allows each group of output devices to reference a different power source.
5. **Dimensions —** Refer to page 187.

Pinout

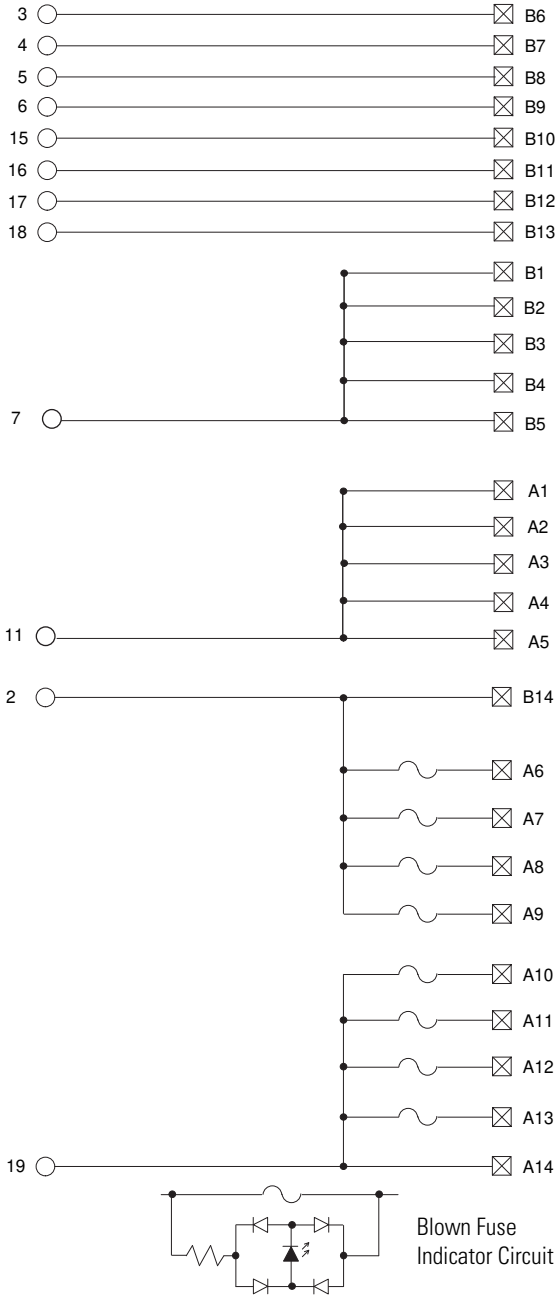

1492-IFM20F-FS120-2

Fusible 8 Individually Isolated with Extra Terminals and 120V AC/DC Blown Fuse LED Indicators

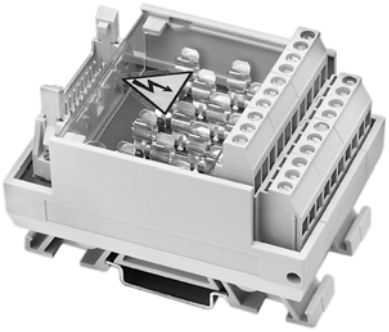

Application Notes

1. **Compatibility —** To ensure proper operation with the I/O module, do **not** exceed the voltage and current ratings of the IFM. When this IFM is used with a hard contact (relay) output circuit that switches an inductive load, surge suppression must be used (e.g., an MOV wired across an AC load).
2. **Wiring —** Refer to the Label Section on page 181. For Field-Side Wiring Diagrams, refer to the Wiring System web site information on page 186.
3. **Fusing —** Fuse holders are included with the IFM. Fuses (5 x 20 mm) are not included.
4. **Isolation —** The fuse clips and blown fuse indicators are isolated into eight groups of terminals. This allows each output device to reference a different power source.
5. **Dimensions —** Refer to page 187.

Pinout

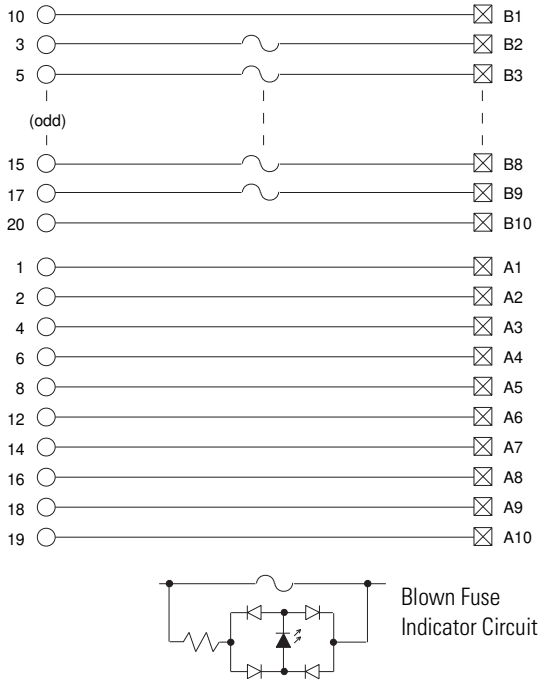

1492-IFM20F-FS120-4

Fusible 8 Individually Isolated with 4 Terminals/Output and 120V AC/DC Blown Fuse LED Indicators

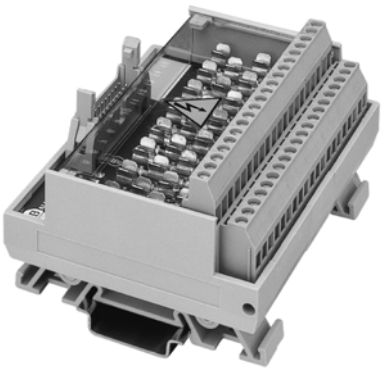

Application Notes

1. **Compatibility —** To ensure proper operation with the I/O module, do **not** exceed the voltage and current ratings of the IFM. When this IFM is used with a hard contact (relay) output circuit that switches an inductive load, surge suppression must be used (e.g., an MOV wired across an AC load).
2. **Wiring —** Refer to the Label Section on page 181. For Field-Side Wiring Diagrams, refer to the Wiring System web site information on page 186.
3. **Fusing —** Ten fuse holders are included with the IFM. Fuses (5 x 20 mm) are not included.
4. **Isolation —** The fuse clips and blown fuse indicators are isolated into eight groups of terminals. This allows each output device to reference a different power source.
5. **Dimensions —** Refer to page 187.

Pinout

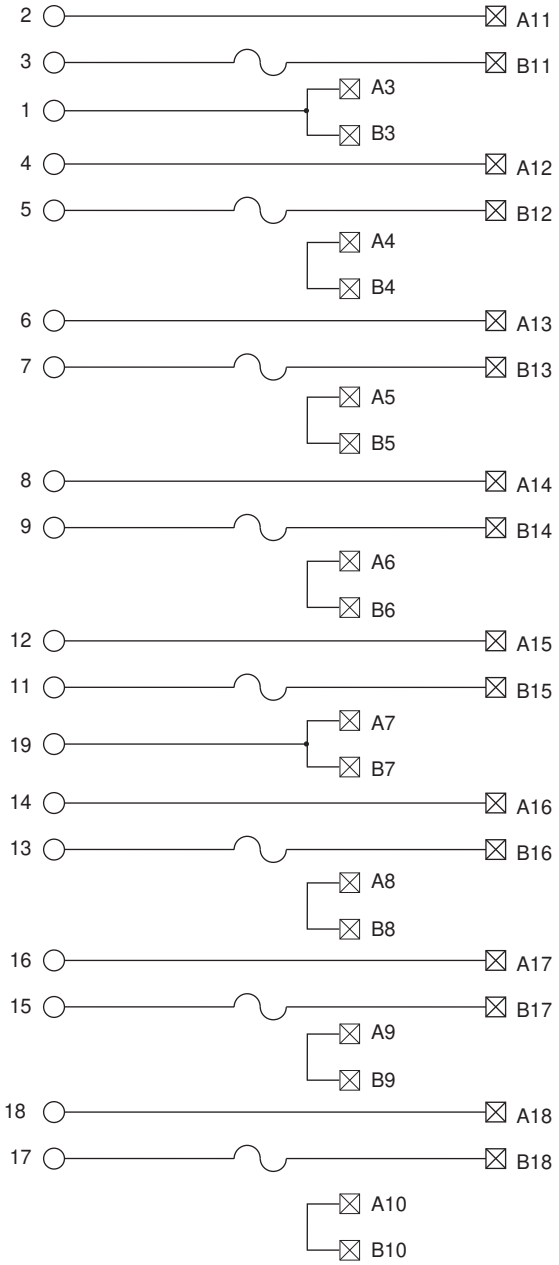

Blown Fuse
Indicator Circuit

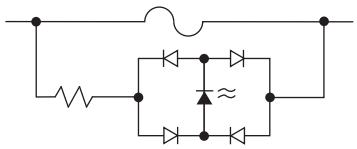

1492-IFM20F-FS120A-4

Fusible Two 4-Point Isolated Groups with 4 Terminals/Input and 120V AC/DC Blown Fuse LED Indicators

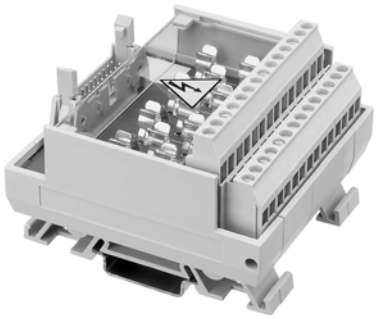

Application Notes

1. **Compatibility —** To ensure proper operation with the I/O module, do **not** exceed the voltage and current ratings of the IFM. When this IFM is used with a hard contact (relay) output circuit that switches an inductive load, surge suppression must be used (e.g., a 1N4004 diode reverse-wired across a DC load or an MOV across an AC load).
2. **Wiring —** Refer to the Label Section on page 181. For Field-Side Wiring Diagrams, refer to the Wiring System web site information on page 186.
3. **Fusing —** Ten fuse holders are included with the IFM. Fuses (5 x 20 mm) are not included.
4. **Isolation —** The fuse clips and blown fuse indicators are isolated into two groups of terminals. This allows each group of input devices to reference a different power source.
5. **Dimensions —** Refer to page 187.

Pinout

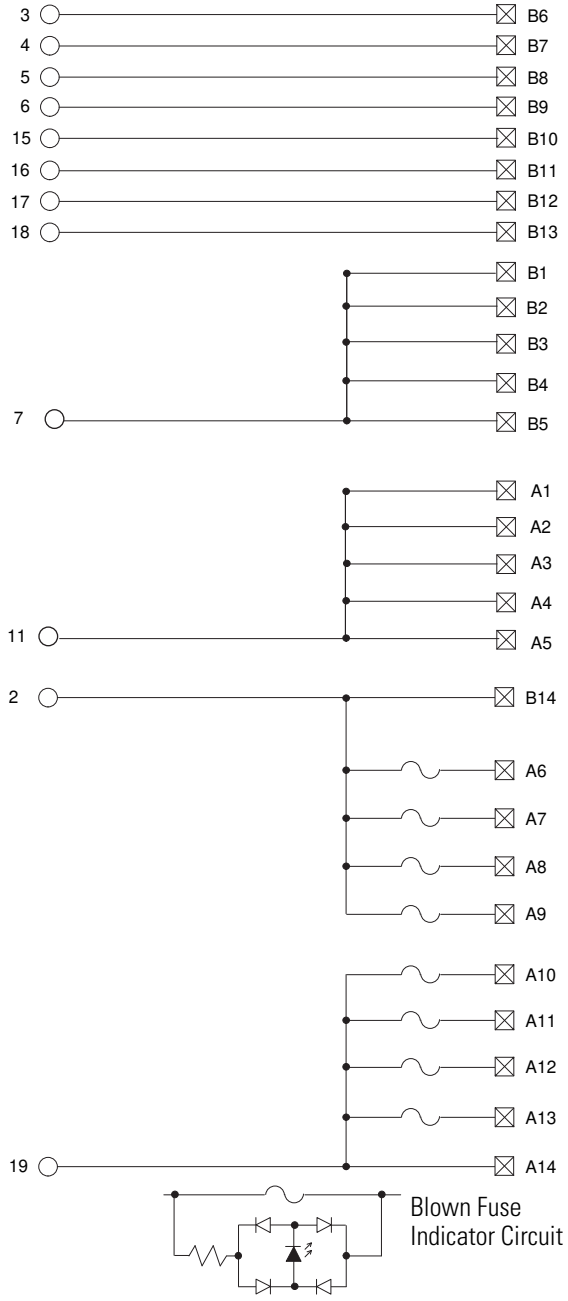

1492-IFM20F-FS240-4

Fusible 8 Individually Isolated with 4 Terminals/Output and 240V AC/DC Blown Fuse LED Indicators

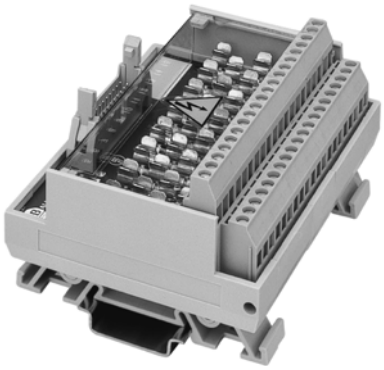

Application Notes

1. **Compatibility —** To ensure proper operation with the I/O module, do **not** exceed the voltage and current ratings of the IFM. When this IFM is used with a hard contact (relay) output circuit that switches an inductive load, surge suppression must be used (e.g., a 1N4004 diode reverse-wired across a DC load or an MOV across an AC load).
2. **Wiring —** Refer to the Label Section on page 181. For Field-Side Wiring Diagrams, refer to the Wiring System web site information on page 186.
3. **Fusing —** Fuse holders are included with the IFM. Fuses (5 x 20 mm) are not included.
4. **Isolation —** The fuse clips and blown fuse indicators are isolated into eight groups of terminals. This allows each output device to reference a different power source.
5. **Dimensions —** Refer to page 187.

Pinout

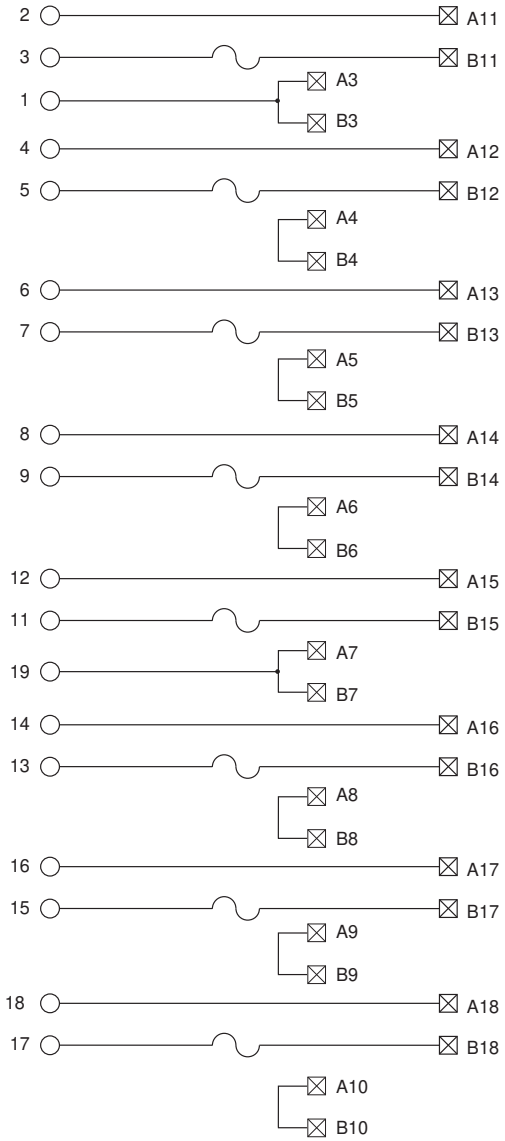

Blown Fuse
Indicator Circuit

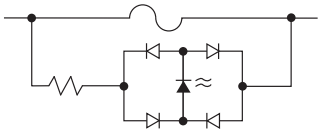

1492-IFM40F
1492-RIFM40F

Feed-Through Standard 132V AC/DC

Application Notes

1. **Compatibility —** To ensure proper operation with the I/O module, do **not** exceed the voltage and current ratings of the IFM.
2. **Wiring —** Refer to the Label Section on page 181. For Field-Side Wiring Diagrams, refer to the Wiring System web site information on page 186.
3. **Dimensions —** Refer to page 187.

Pinout

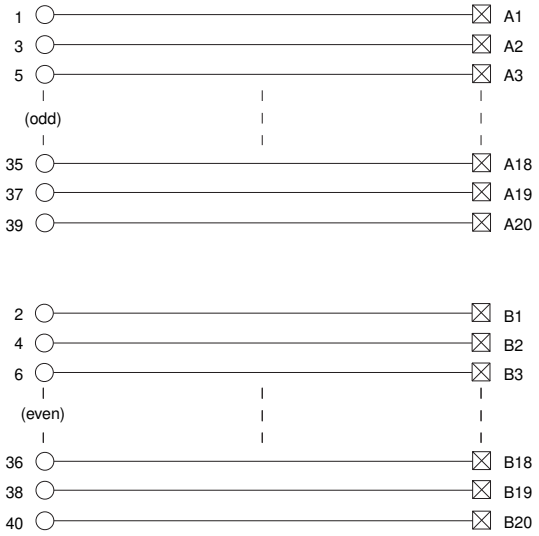

1492-IFM40F-2
1492-RIFM40F-2

Feed-Through Extra Terminals (2 per I/O) 132V AC/DC

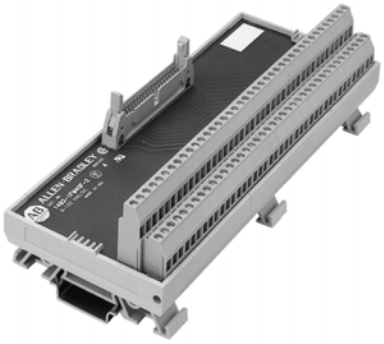

Application Notes

1. **Compatibility —** To ensure proper operation with the I/O module, do **not** exceed the voltage and current ratings of the IFM.
2. **Wiring —** Refer to the Label Section on page 181. For Field-Side Wiring Diagrams, refer to the Wiring System web site information on page 186.
3. **Isolation —** The power bus is isolated into four groups of 10 terminals. This allows each group of the I/O devices to reference a different power source.
4. **Dimensions —** Refer to page 187.

Pinout

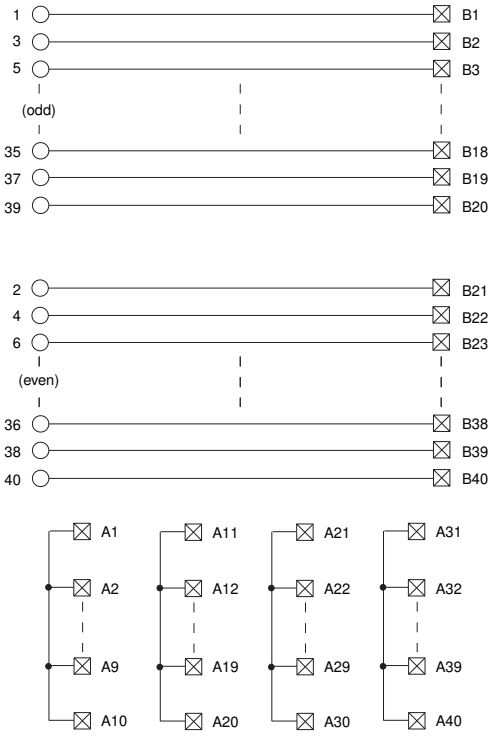

1492-IFM40F-3

Feed-Through 3-Wire Sensor Type Input Devices 60V AC/DC

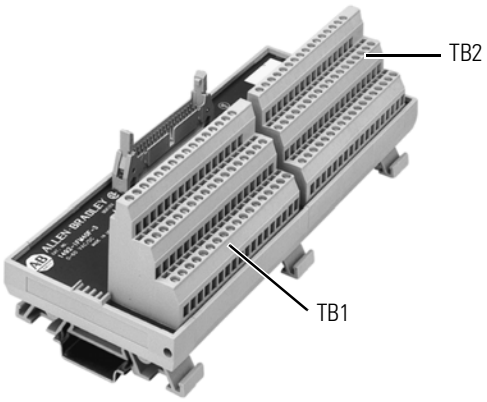

Application Notes

1. **Compatibility —** To ensure proper operation with the I/O module, do **not** exceed the voltage and current ratings of the IFM.
2. **Wiring —** Refer to the Label Section on page 181. For Field-Side Wiring Diagrams, refer to the Wiring System web site information on page 186.
3. **Isolation —** The power busses are isolated into two groups of 18 terminals. This allows the input devices connected to the left field-side terminal block to reference a different power source than the input devices connected to the right field-side terminal block.
4. **Dimensions —** Refer to page 187.

Pinout

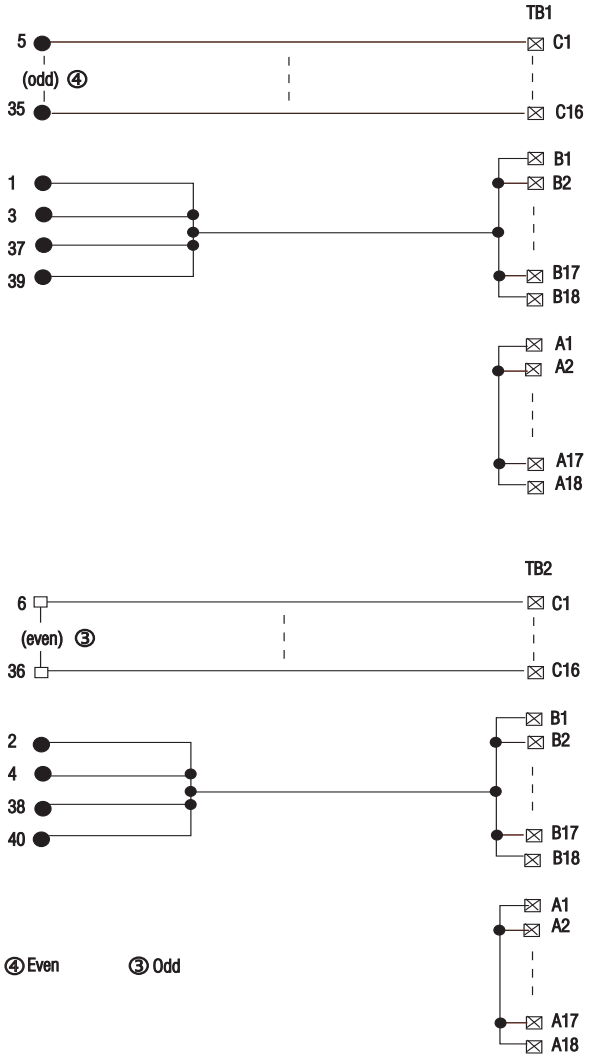

1492-IFM40D24

1492-RIFM40D24

LED Indicating Standard with 24V AC/DC LEDs

Application Notes

1. **Compatibility —** To ensure proper operation with the I/O module, do **not** exceed the voltage and current ratings of the IFM. When this IFM is used with a hard contact (relay) output circuit that switches an inductive load, surge suppression must be used (e.g., a 1N4004 diode reverse-wired across a DC load).
2. **Wiring —** The LEDs are powered off the two-position terminal block. Make only one connection to the power source for normal operation. Refer to the Label Section on page 181. For Field-Side Wiring Diagrams, refer to the Wiring System web site information on page 186.
3. **Isolation —** The LEDs are connected to one common. All of the I/O devices used must reference the same power source.
4. **Dimensions —** Refer to page 187.

Pinout

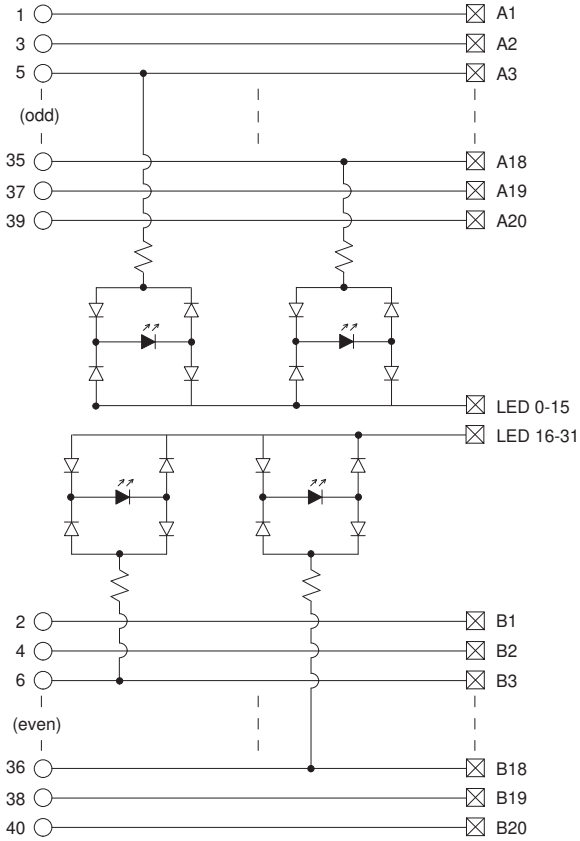

1492-IFM40D24-2

LED Indicating24V AC/DC LEDs and Extra Terminals for Outputs

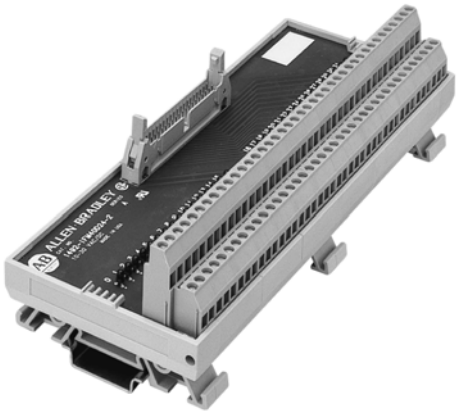

Application Notes

1. **Compatibility —** To ensure proper operation with the I/O module, do **not** exceed the voltage and current ratings of the IFM. When this IFM is used with a hard contact (relay) output circuit that switches an inductive load, surge suppression must be used (e.g., a 1N4004 diode reverse-wired across a DC load).
2. **Wiring —** Refer to the Label Section on page 181. For Field-Side Wiring Diagrams, refer to the Wiring System web site information on page 186.
3. **Isolation —** The power bus and LEDs are isolated into four groups of 10 terminals (eight LEDs). This allows each group of output devices to reference a different power source.
4. **Dimensions —** Refer to page 187.

Pinout

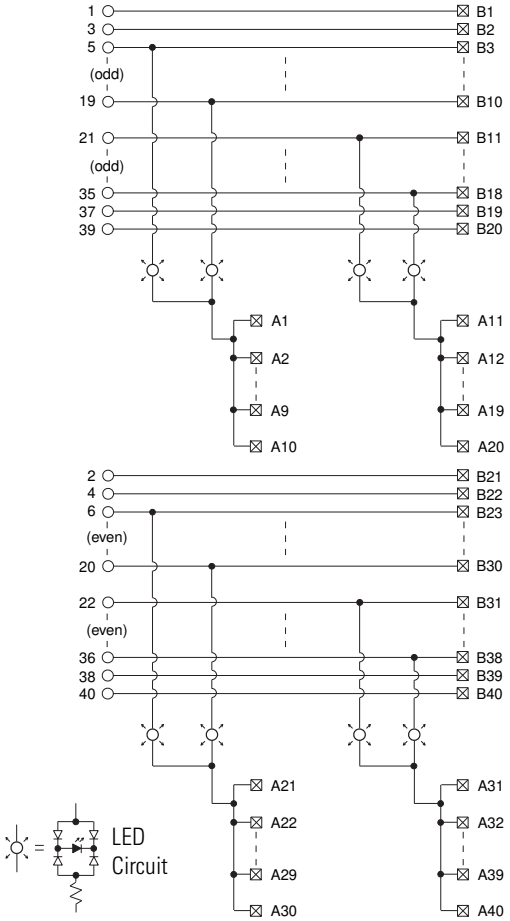

1492-IFM40D24A-2
1492-RIFM40D24A-2

LED Indicating24V AC/DC LEDs and Extra Terminals for Inputs

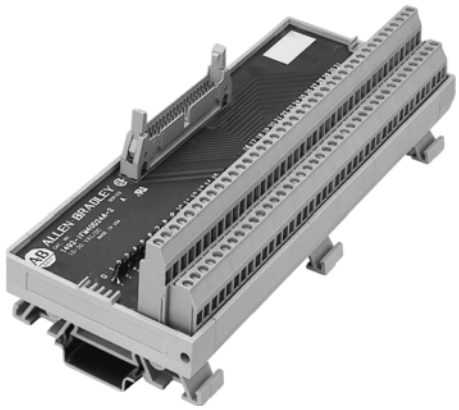

Application Notes

1. **Compatibility —** To ensure proper operation with the I/O module, do **not** exceed the voltage and current ratings of the IFM. When this IFM is used with a hard contact (relay) output circuit that switches an inductive load, surge suppression must be used (e.g., a 1N4004 diode reverse-wired across a DC load).
2. **Wiring —** Refer to the Label Section on page 181. For Field-Side Wiring Diagrams, refer to the Wiring System web site information on page 186.
3. **Isolation —** The power bus and LEDs are isolated into four groups of 10 terminals (eight LEDs). This allows each group of input devices to reference a different power source.
4. **Dimensions —** Refer to page 187.

Pinout

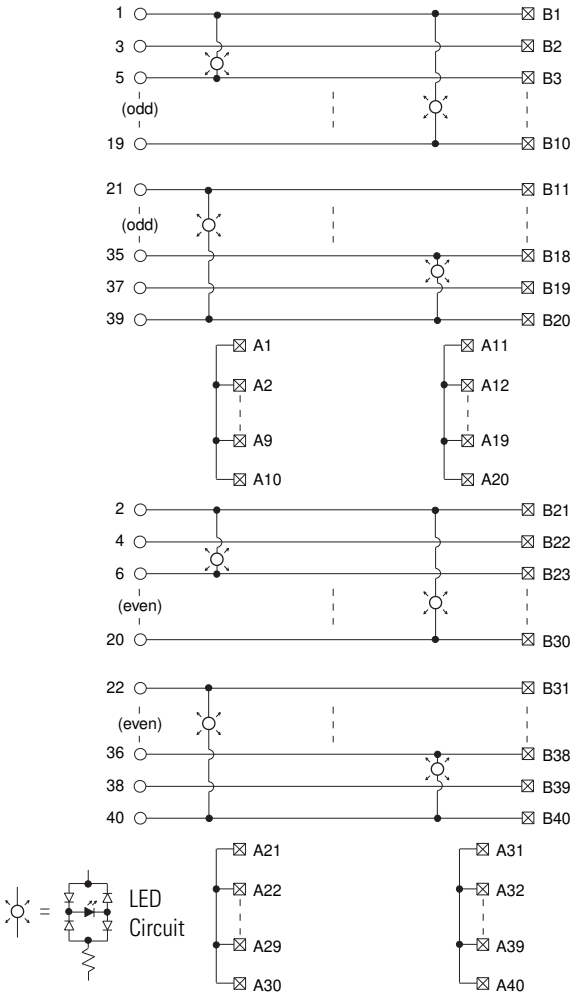

1492-IFM40D120-2

LED Indicating 120V AC LEDs and Extra Terminals for Outputs

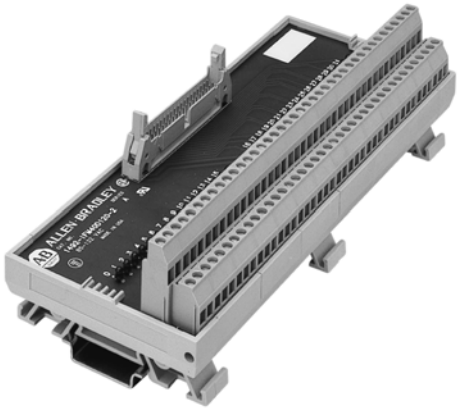

Application Notes

1. **Compatibility —** To ensure proper operation with the I/O module, do **not** exceed the voltage and current ratings of the IFM. When this IFM is used with a hard contact (relay) output circuit that switches an inductive load, surge suppression must be used (e.g., an MOV wired across an AC load).
2. **Wiring —** Refer to the Label Section on page 181. For Field-Side Wiring Diagrams, refer to the Wiring System web site information on page 186.
3. **Isolation —** The power bus and LEDs are isolated into four groups of 10 terminals (eight LEDs). This allows each group of output devices to reference a different power source.
4. **Dimensions —** Refer to page 187.

Pinout

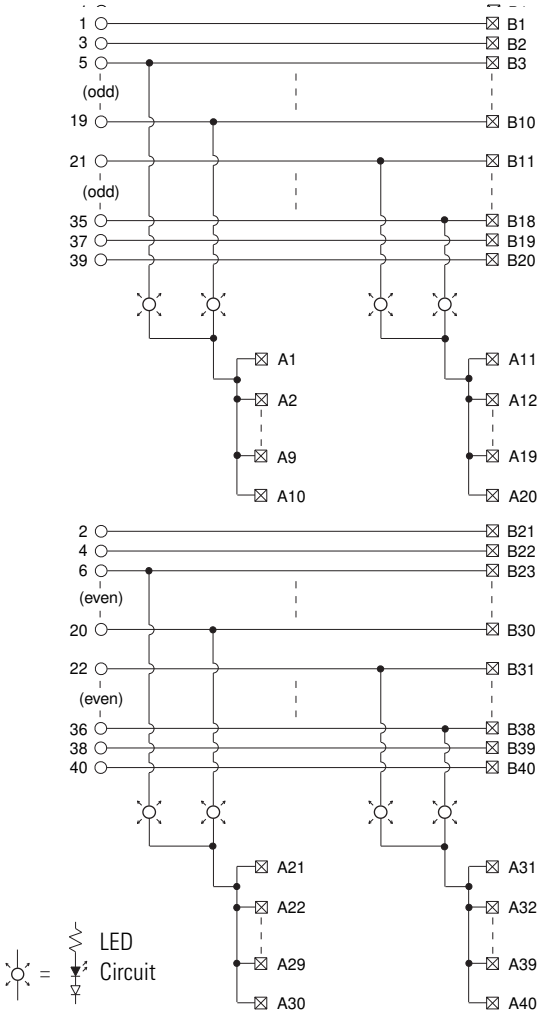

1492-IFM40D120A-2

LED Indicating 120V AC LEDs and Extra Terminals for Inputs

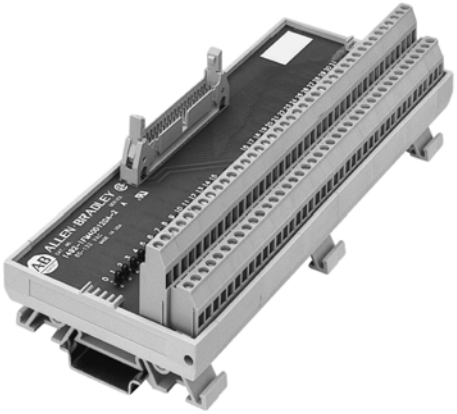

Application Notes

1. **Compatibility —** To ensure proper operation with the I/O module, do **not** exceed the voltage and current ratings of the IFM. When this IFM is used with a hard contact (relay) output circuit that switches an inductive load, surge suppression must be used (e.g., an MOV wired across an AC load).
2. **Wiring —** Refer to the Label Section on page 181. For Field-Side Wiring Diagrams, refer to the Wiring System web site information on page 186.
3. **Isolation —** The power bus and LEDs are isolated into four groups of 10 terminals (eight LEDs). This allows each group of input devices to reference a different power source.
4. **Dimensions —** Refer to page 187.

Pinout

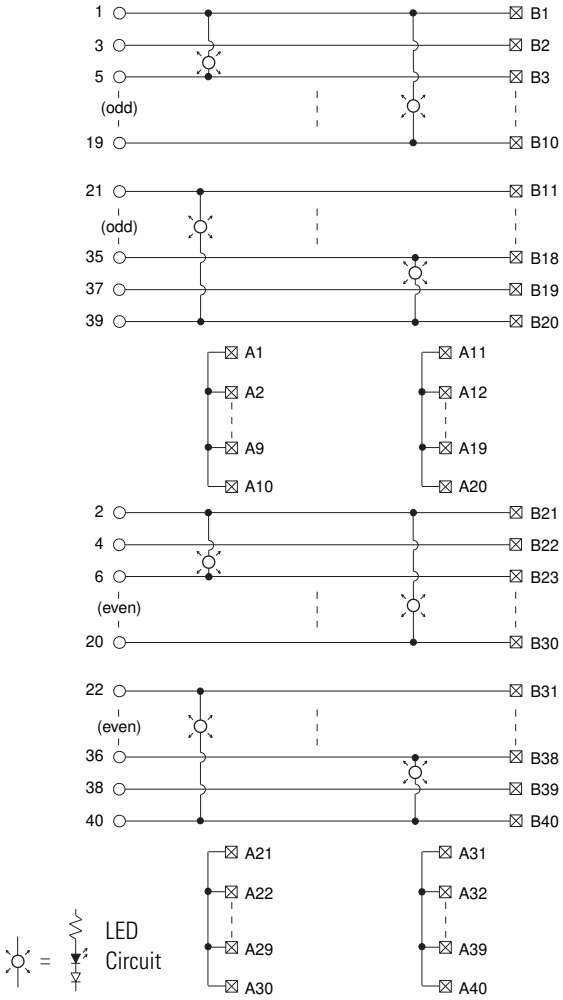

1492-IFM40D24-3

LED Indicating 3-Wire Sensor with 24V AC/DC LEDs

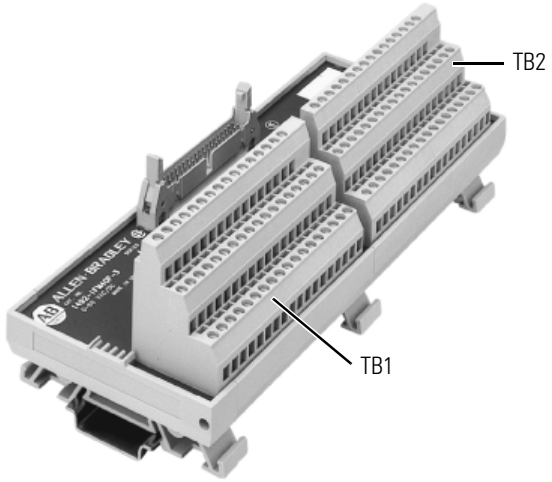

Application Notes

1. **Compatibility —** To ensure proper operation with the I/O module, do **not** exceed the voltage and current ratings of the IFM. When this IFM is used with a hard contact (relay) output circuit that switches an inductive load, surge suppression must be used (e.g., a 1N4004 diode reverse-wired across a DC load).
2. **Wiring —** Refer to the Label Section on page 181. For Field-Side Wiring Diagrams, refer to the Wiring System web site information on page 186.
3. **Isolation —** The power busses and LEDs are isolated into two groups of 18 terminals (16 LEDs). This allows the input devices connected to the left field-side terminal block to reference a different power source than the input devices connected to the right field-side terminal block.
4. **Dimensions —** Refer to page 187.

Pinout

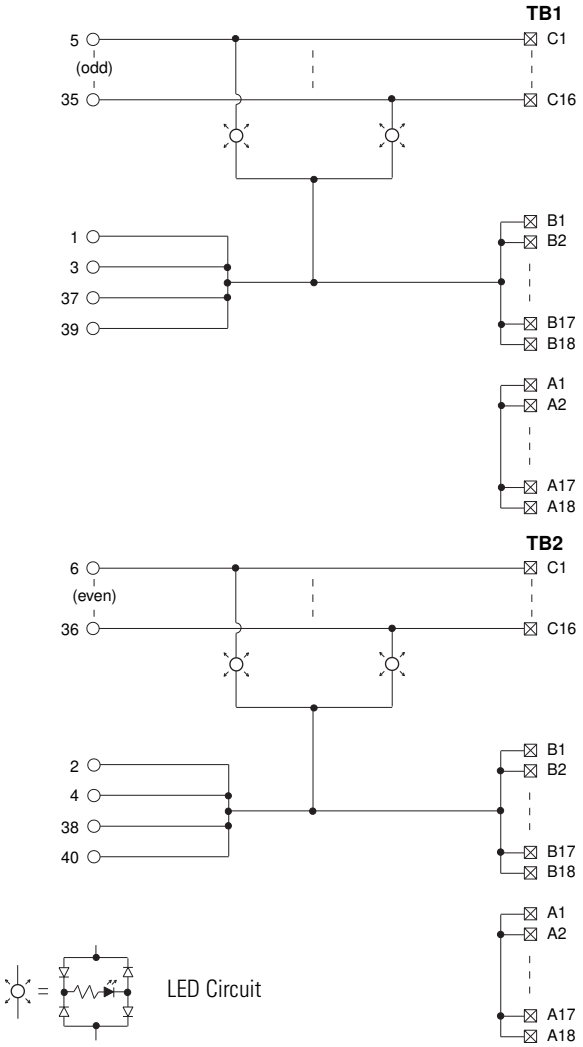

1492-IFM40DS24-4

LED Indicating 16 Individually Isolated with 24/48V AC/DC LEDs and 4 Terminals/Output

Application Notes

1. **Compatibility —** To ensure proper operation with the I/O module, do **not** exceed the voltage and current ratings of the IFM. When this IFM is used with a hard contact (relay) output circuit that switches an inductive load, surge suppression must be used (e.g., a 1N4004 diode reverse-wired across a DC load).
2. **Wiring —** Refer to the Label Section on page 181. For Field-Side Wiring Diagrams, refer to the Wiring System web site information on page 186.
3. **Isolation —** There are 16 individually isolated channels. LED returns are individually isolated.
4. **Extra Terminals —** Two field-side terminals are internally connected on the IFM for each channel, and are available for power source common connections.
5. **Dimensions —** Refer to page 187.

Pinout

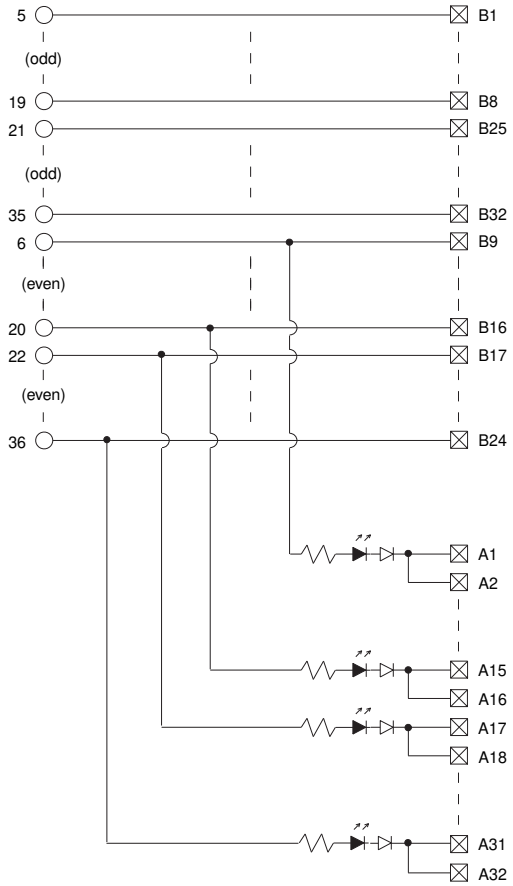

1492-IFM40DS24A-4

LED Indicating 16 Individually Isolated with 24V AC/DC LEDs and 4 Terminals/Input

Application Notes

1. **Compatibility —** To ensure proper operation with the I/O module, do **not** exceed the voltage and current ratings of the IFM. When this IFM is used with a hard contact (relay) output circuit that switches an inductive load, surge suppression must be used (e.g., a 1N4004 diode reverse-wired across a DC load).
2. **Wiring —** Refer to the Label Section on page 181. For Field-Side Wiring Diagrams, refer to the Wiring System web site information on page 186.
3. **Isolation —** There are 16 individually isolated channels. LED returns are individually isolated.
4. **Extra Terminals —** Two field-side terminals are internally connected on the IFM for each channel, and are available for power source common connections.
5. **Dimensions —** Refer to page 187.

Pinout

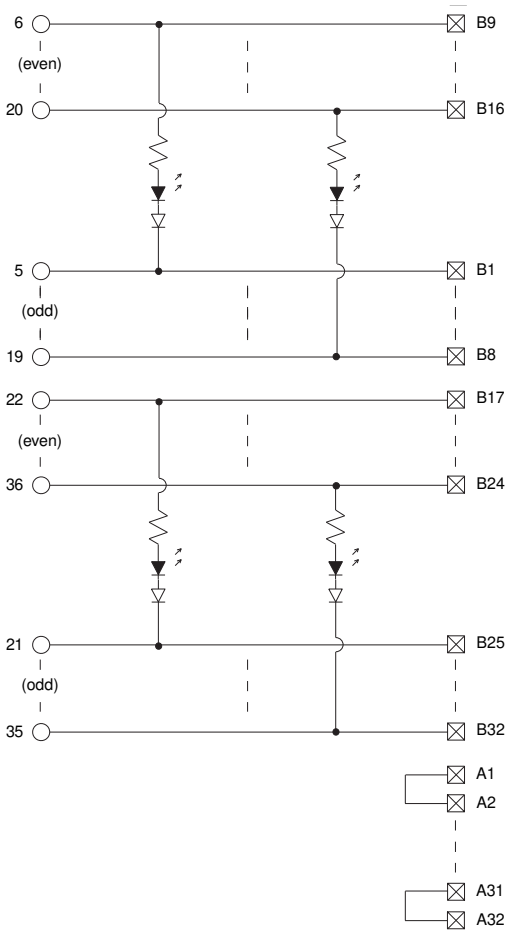

1492-IFM40DS120-4

LED Indicating 16 Individually Isolated with 120V AC and 4 Terminals/Output

Application Notes

1. **Compatibility —** To ensure proper operation with the I/O module, do **not** exceed the voltage and current ratings of the IFM. When this IFM is used with a hard contact (relay) output circuit that switches an inductive load, surge suppression must be used (e.g., an MOV wired across an AC load).
2. **Wiring —** Refer to the Label Section on page 181. For Field-Side Wiring Diagrams, refer to the Wiring System web site information on page 186.
3. **Isolation —** There are 16 individually isolated channels. LED returns are individually isolated.
4. **Extra Terminals —** Two field-side terminals are internally connected on the IFM for each channel, and are available for power source common connections.
5. **Dimensions —** Refer to page 187.

Pinout

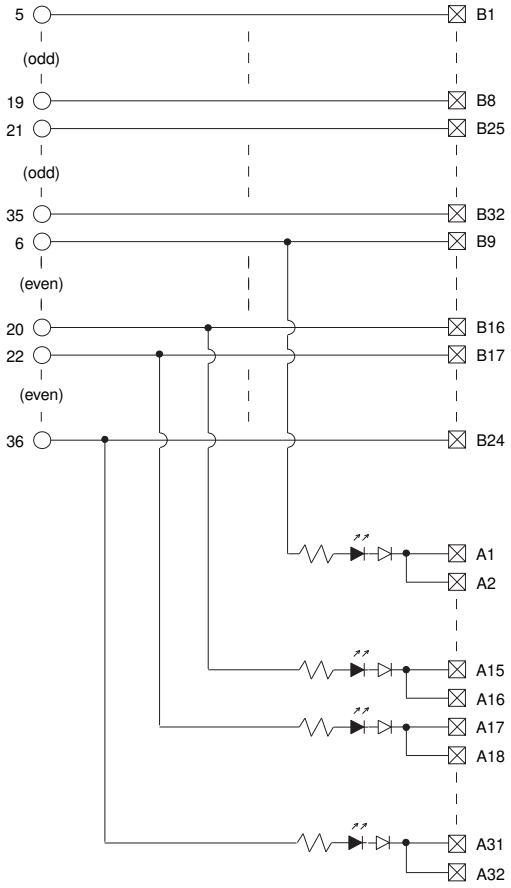

1492-IFM40DS120A-4

LED Indicating 16 Individually Isolated with 120V AC LEDs and 4 Terminals/Input

Application Notes

1. **Compatibility —** To ensure proper operation with the I/O module, do **not** exceed the voltage and current ratings of the IFM. When this IFM is used with a hard contact (relay) output circuit that switches an inductive load, surge suppression must be used (e.g., an MOV wired across an AC load).
2. **Wiring —** Refer to the Label Section on page 181. For Field-Side Wiring Diagrams, refer to the Wiring System web site information on page 186.
3. **Isolation —** There are 16 individually isolated channels. LED returns are individually isolated.
4. **Extra Terminals —** Two field-side terminals are internally connected on the IFM for each channel, and are available for power source common connections.
5. **Dimensions —** Refer to page 187.

Pinout

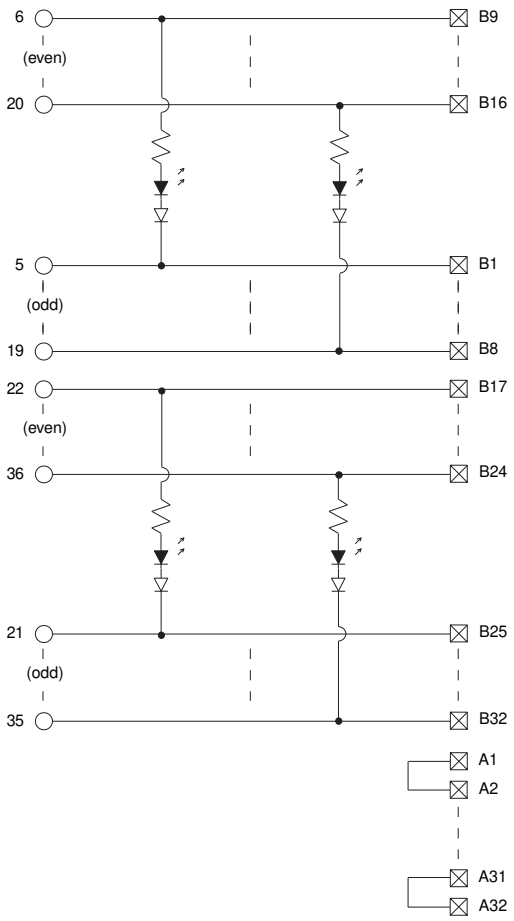

1492-IFM40DS240A-4

LED Indicating 16 Individually Isolated with 240V AC LEDs and 4 Terminals/Input

Pinout

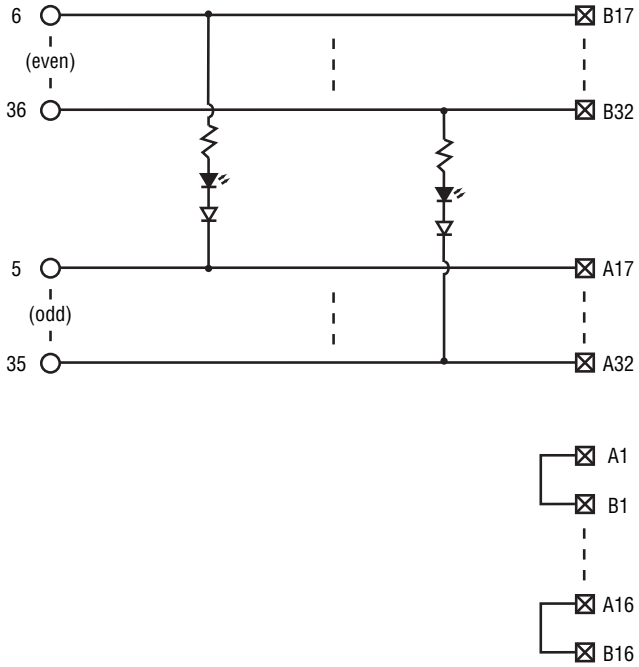

Application Notes

1. **Compatibility —** To ensure proper operation with the I/O module, do **not** exceed the voltage and current ratings of the IFM. When this IFM is used with a hard contact (relay) output circuit that switches an inductive load, surge suppression must be used (e.g., an MOV wired across an AC load).
2. **Wiring —** Refer to the Label Section on page 181. For Field-Side Wiring Diagrams, refer to the Wiring System web site information on page 186.
3. **Isolation —** There are 16 individually isolated channels. LED returns are individually isolated.
4. **Extra Terminals —** Two field-side terminals are internally connected on the IFM for each channel, and are available for power source common connections.
5. **Dimensions —** Refer to page 187.

1492-IFM40F-F-2

Fusible 120V AC/DC with Extra Terminals for Outputs

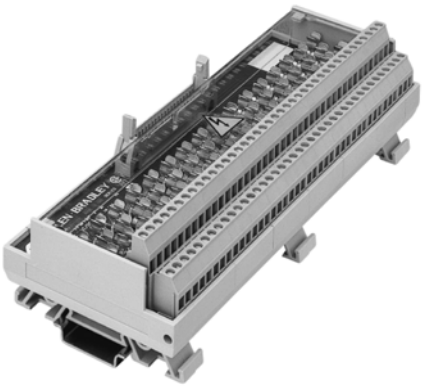

Application Notes

1. **Compatibility —** To ensure proper operation with the I/O module, do **not** exceed the voltage and current ratings of the IFM.
2. **Wiring —** Refer to the Label Section on page 181. For Field-Side Wiring Diagrams, refer to the Wiring System web site information on page 186.
3. **Fusing —** Fuse holders are included with the IFM. Fuses (5 x 20 mm) are not included.
4. **Isolation —** The power bus and fuse clips are isolated into four groups of 10 terminals (eight fuse clips). This allows each group of output devices to reference a different power source.
5. **Dimensions —** Refer to page 187.

Pinout

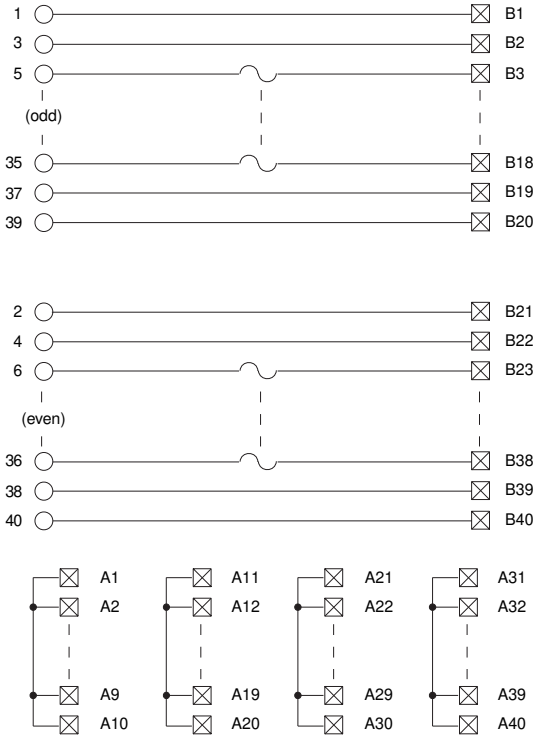

1492-IFM40F-F24-2

1492-RIFM40F-F24-2

Fusible Extra Terminals with 24V AC/DC Blown Fuse LED Indicators for Outputs

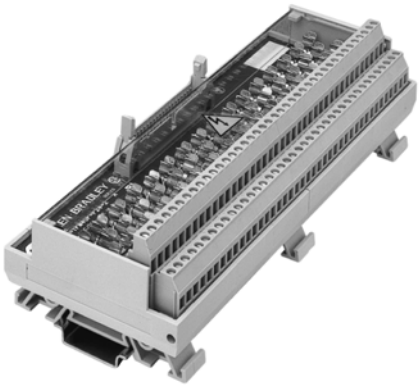

Application Notes

1. **Compatibility —** To ensure proper operation with the I/O module, do **not** exceed the voltage and current ratings of the IFM. When this IFM is used with a hard contact (relay) output circuit that switches an inductive load, surge suppression must be used (e.g., a 1N4004 diode reverse-wired across a DC load).
2. **Wiring —** Refer to the Label Section on page 181. For Field-Side Wiring Diagrams, refer to the Wiring System web site information on page 186.
3. **Fusing —** Fuse holders are included with the IFM. Fuses (5 x 20 mm) are not included.
4. **Isolation —** The power bus, fuse clips, and blown fuse indicators are isolated into four groups of 10 terminals (eight fuse clips and blown fuse indicators). This allows each group of output devices to reference a different power source.
5. **Dimensions —** Refer to page 187.

Pinout

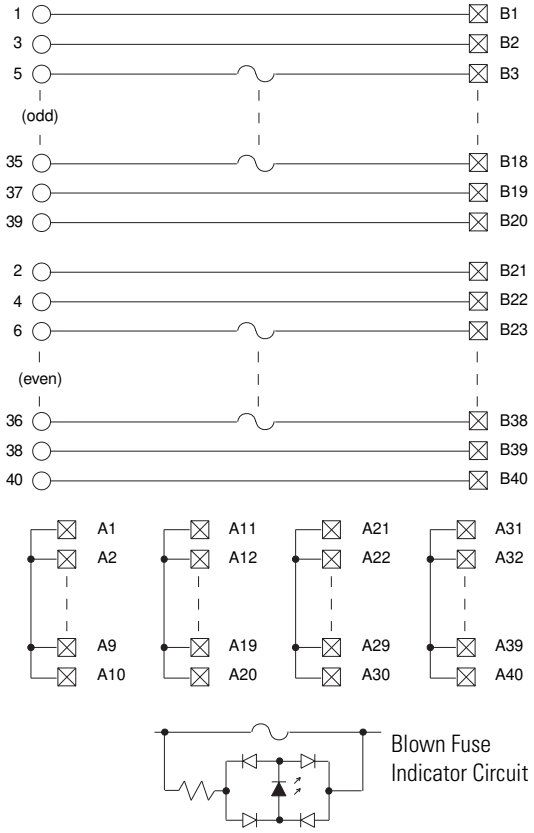

1492-IFM40F-F24D-2

16 Individually fused with 24V DC blown fuse low leakage (0.05 mA) LED circuit, 4 isolated groups, 2 terminals/output

Application Notes

1. **Compatibility —** To ensure proper operation with the I/O module, do **not** exceed the voltage and current ratings of the IFM. When this IFM is used with a hard contact (relay) output circuit that switches an inductive load, surge suppression must be used (e.g., a 1N4004 diode reverse-wired across a DC load).
2. **Wiring —** Refer to the Label Section on page 181. For Field-Side Wiring Diagrams, refer to the Wiring System web site information on page 186.
3. **Fusing —** Fuse holders are included with the IFM. Fuses (5 x 20 mm) are not included.
4. **Isolation —** Each point is individually fused. The fuse clips and blown fuse indicators are isolated into 4 groups of terminals. This allows use with 4 separate power supplies.
5. **Dimensions —** Refer to page 187.

Pinout

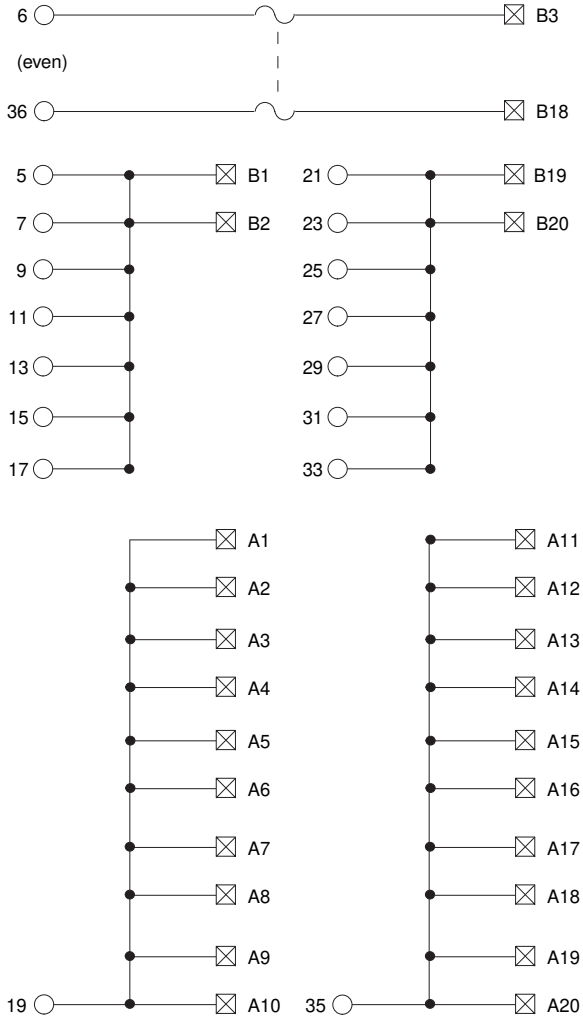

Blown Fuse Indicator Circuit

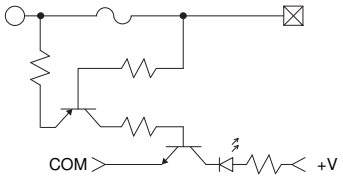

1492-IFM40F-F24AD-4

Individually Fused w/24V DC blown fuse low leakage (0.05 mA) LED circuit, 4 isolated groups, 4 terminals/input

Application Notes

1. **Compatibility —** To ensure proper operation with the I/O module, do **not** exceed the voltage and current ratings of the IFM.
2. **Wiring —** Refer to the Label Section on page 181. For Field-Side Wiring Diagrams, refer to the Wiring System web site information on page 186.
3. **Fusing —** Fuse holders are included with the IFM. Fuses (5 x 20 mm) are not included.
4. **Extra Terminals —** Two field-side terminals are internally connected on the IFM for each channel, and are available for power source common connections.
5. **Isolation —** Each point is individually fused. The fuse clips and blown fuse indicators are isolated into 4 groups. This allows use of 4 separate power supplies.
6. **Dimensions —** Refer to page 187.

Pinout

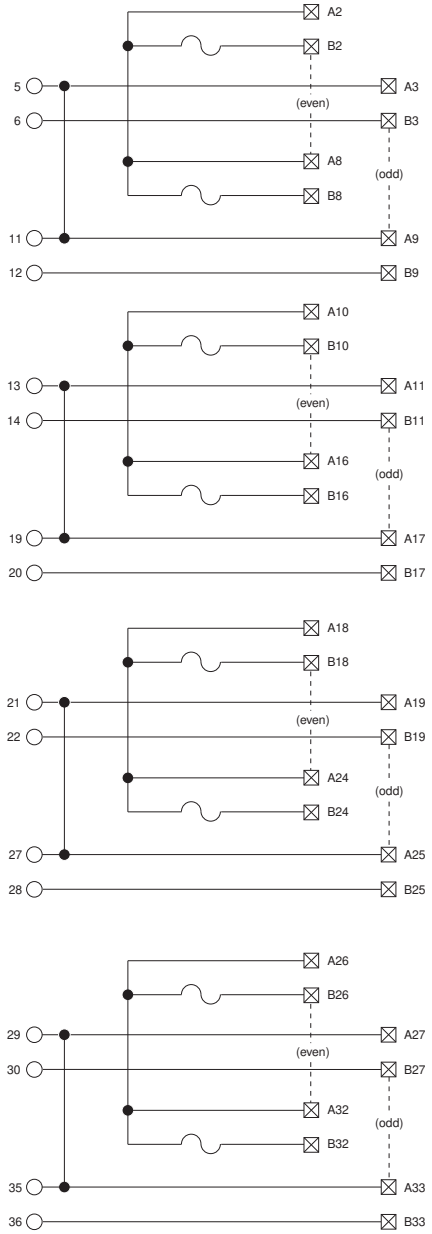

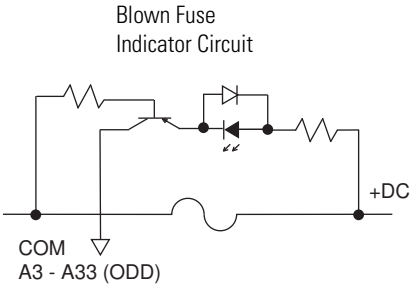

1492-IFM40F-F120-2

Fusible Extra Terminals with 120V AC/DC Blown Fuse LED Indicators for Outputs

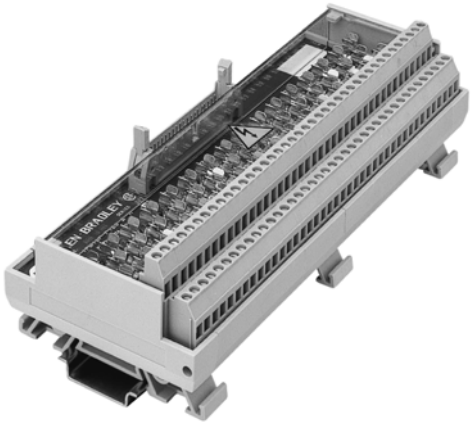

Application Notes

1. **Compatibility —** To ensure proper operation with the I/O module, do **not** exceed the voltage and current ratings of the IFM. When this IFM is used with a hard contact (relay) output circuit that switches an inductive load, surge suppression must be used (e.g., an MOV wired across an AC load).
2. **Wiring —** Refer to the Label Section on page 181. For Field-Side Wiring Diagrams, refer to the Wiring System web site information on page 186.
3. **Fusing —** Fuse holders are included with the IFM. Fuses (5 x 20 mm) are not included.
4. **Isolation —** The power bus, fuse clips, and blown fuse indicators are isolated into four groups of 10 terminals (eight fuse clips and blown fuse indicators). This allows each group of output devices to reference a different power source.
5. **Dimensions —** Refer to page 187.

Pinout

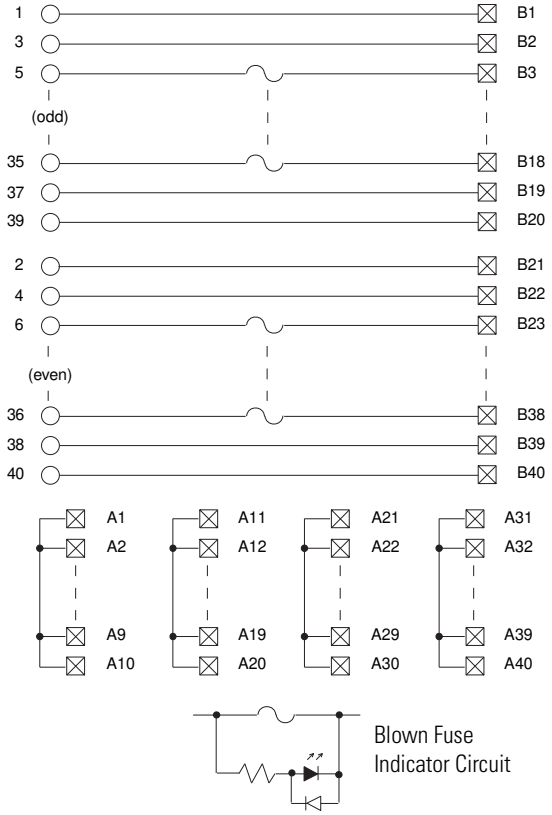

1492-IFM40F-FS-2

Fusible 16 Individually Isolated with Extra Terminals for 120V AC/DC Outputs

Application Notes

1. **Compatibility —** To ensure proper operation with the I/O module, do **not** exceed the voltage and current ratings of the IFM.
2. **Wiring —** Refer to the Label Section on page 181. For Field-Side Wiring Diagrams, refer to the Wiring System web site information on page 186.
3. **Fusing —** Fuse holders are included with the IFM. Fuses (5 x 20 mm) are not included.
4. **Isolation —** The fuse clips are isolated into 16 groups of terminals. This allows each output device to reference a different power source.
5. **Dimensions —** Refer to page 187.

Pinout

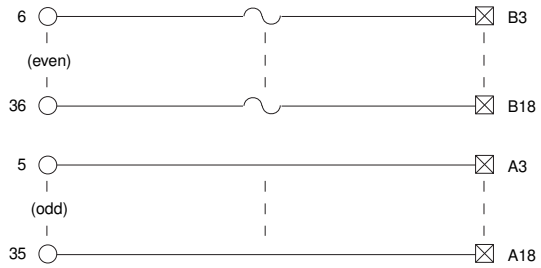

1492-IFM40F-FS24-2

Fusible 16 Individually Isolated with Extra Terminals and 24V AC/DC Blown Fuse LED Indicators for Outputs

Application Notes

1. **Compatibility —** To ensure proper operation with the I/O module, do **not** exceed the voltage and current ratings of the IFM. When this IFM is used with a hard contact (relay) output circuit that switches an inductive load, surge suppression must be used (e.g., a 1N4004 diode reverse-wired across a DC load).
2. **Wiring —** Refer to the Label Section on page 181. For Field-Side Wiring Diagrams, refer to the Wiring System web site information on page 186.
3. **Fusing —** Fuse holders are included with the IFM. Fuses (5 x 20 mm) are not included.
4. **Isolation —** The fuse clips and blown fuse indicators are isolated into 16 groups of terminals. This allows each output device to reference a different power source.
5. **Dimensions —** Refer to page 187.

Pinout

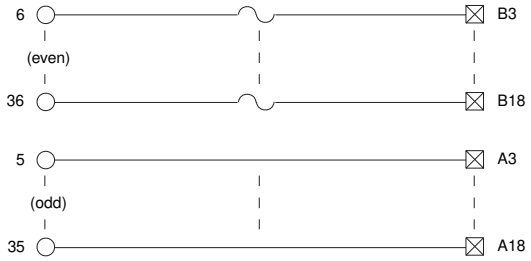

Blown Fuse Indicator Circuit

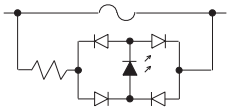

1492-IFM40F-FS24-4

Fusible Individually Isolated with 24V AC/DC Blown Fuse Indicators and 4 Terminals/Output

Application Notes

1. **Compatibility —** To ensure proper operation with the I/O module, do **not** exceed the voltage and current ratings of the IFM. When this IFM is used with a hard contact (relay) output circuit that switches an inductive load, surge suppression must be used (e.g., a 1N4004 diode reverse-wired across a DC load or an MOV for AC loads).
2. **Wiring —** Refer to the Label Section on page 181. For Field-Side Wiring Diagrams, refer to the Wiring System web site information on page 186.
3. **Fusing —** 20 fuse holders are included with the IFM. Fuses (5 x 20 mm) are not included.
4. **Extra Terminals —** Two field-side terminals are internally connected on the IFM for each channel, and are available for power source common connections.
5. **Isolation —** The fuse clips and blown fuse indicators are isolated into 16 groups of terminals. This allows each output device to reference a different power source.
6. **Dimensions —** Refer to page 187.

Pinout

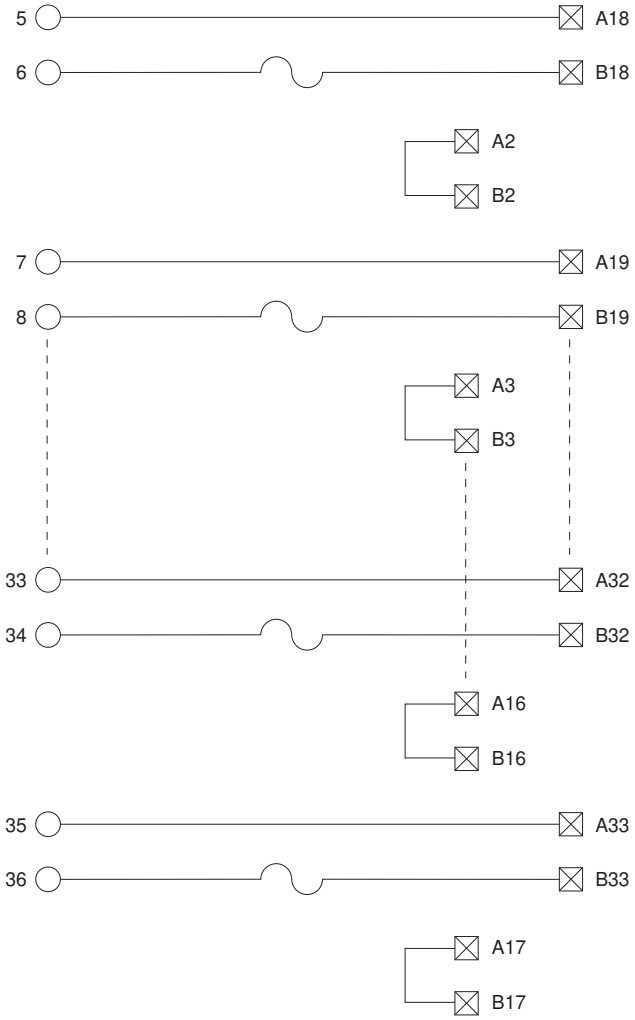

1492-IFM40F-FS-4

Fusible 16 Individually Isolated 240V AC/DC with 4 Terminals/Output

:Application Notes

1. **Compatibility —** To ensure proper operation with the I/O module, do **not** exceed the voltage and current ratings of the IFM. When this IFM is used with a hard contact (relay) output circuit that switches an inductive load, surge suppression must be used (e.g., a 1N4004 diode reverse-wired across a DC load or an MOV for AC loads).
2. **Wiring —** Refer to the Label Section on page 181. For Field-Side Wiring Diagrams, refer to the Wiring System web site information on page 186.
3. **Fusing —** 20 fuse holders are included with the IFM. Fuses (5 x 20 mm) are not included.
4. **Extra Terminals —** Two field-side terminals are internally connected on the IFM for each channel, and are available for power source common connections.
5. **Isolation —** The fuse clips are isolated into 16 groups of terminals. This allows each output device to reference a different power source.
6. **Dimensions —** Refer to page 187.

Pinout

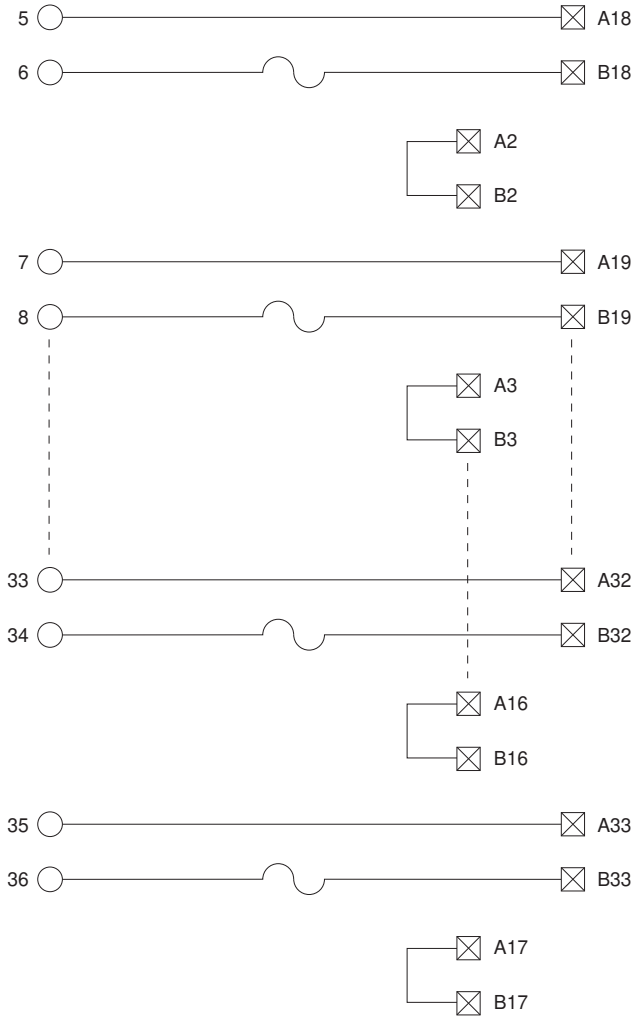

1492-IFM40F-FS120-2

1492-RIFM40F-FS120-2

Fusible 16 Individually Isolated with Extra Terminals and 120V AC/DC Blown Fuse LED Indicators for Outputs

Application Notes

1. **Compatibility —** To ensure proper operation with the I/O module, do **not** exceed the voltage and current ratings of the IFM. When this IFM is used with a hard contact (relay) output circuit that switches an inductive load, surge suppression must be used (e.g., a 1N4004 diode reverse-wired across a DC load or an MOV across an AC load).
2. **Wiring —** Refer to the Label Section on page 181. For Field-Side Wiring Diagrams, refer to the Wiring System web site information on page 186.
3. **Fusing —** Fuse holders are included with the IFM. Fuses (5 x 20 mm) are not included.
4. **Isolation —** The fuse clips and blown fuse indicators are isolated into 16 groups of terminals. This allows each output device to reference a different power source.
5. **Dimensions —** Refer to page 187.

Pinout

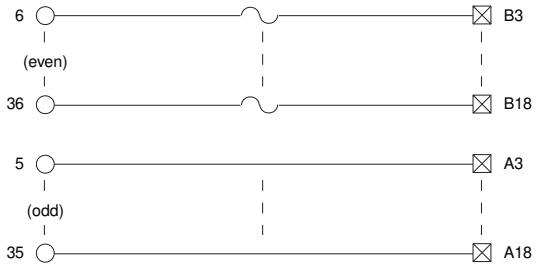

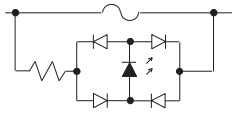

Blown Fuse Indicator Circuit

1492-IFM40F-FS120-4

1492-IFM40F-FS120-4

Fusible 16 Individually Isolated with 120V AC/DC Blown Fuse LED Indicators & 4 Terminals/Output

Pinout

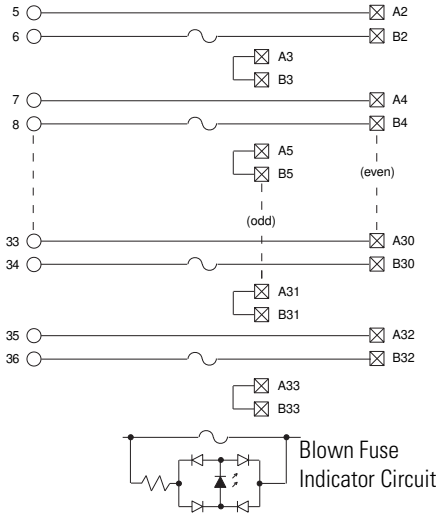

Application Notes

1. **Compatibility —** To ensure proper operation with the I/O module, do **not** exceed the voltage and current ratings of the IFM. When this IFM is used with a hard contact (relay) output circuit that switches an inductive load, surge suppression must be used (e.g., a 1N4004 diode reverse-wired across a DC load or an MOV across an AC load).
2. **Wiring —** Refer to the Label Section on page 181. For Field-Side Wiring Diagrams, refer to the Wiring System web site information on page 186.
3. **Fusing —** Fuse holders are included with the IFM. Fuses (5 x 20 mm) are not included.
4. **Extra Terminals —** Two field-side terminals are internally connected on the IFM for each channel, and are available for power source common connections.
5. **Isolation —** The fuse clips and blown fuse indicators are isolated into 16 groups of terminals. This allows each output device to reference a different power source.
6. **Dimensions —** Refer to page 187.

1492-IFM40F-FS240-4

Fusible 16 Individually Isolated with 240V AC/DC Blown Fuse LED Indicators & 4 Terminals/Output

Pinout

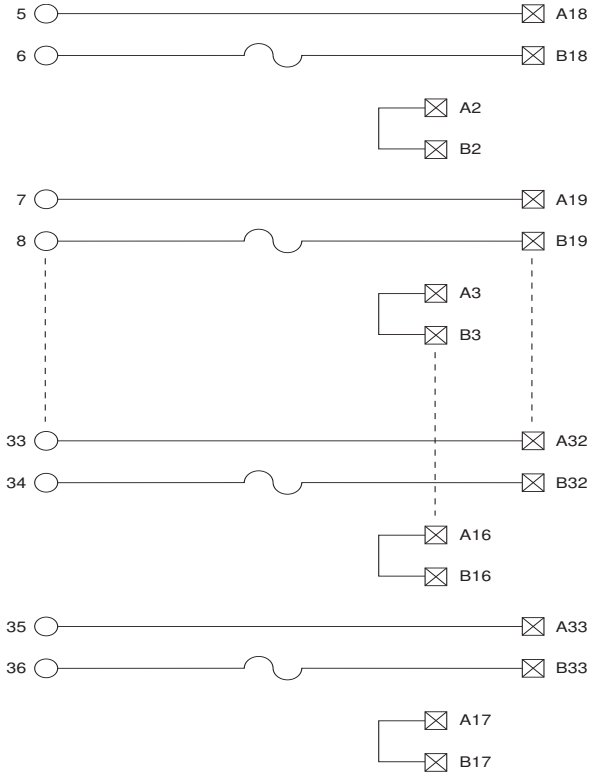

Application Notes

1. **Compatibility —** To ensure proper operation with the I/O module, do **not** exceed the voltage and current ratings of the IFM. When this IFM is used with a hard contact (relay) output circuit that switches an inductive load, surge suppression must be used (e.g., a 1N4004 diode reverse-wired across a DC load or an MOV across an AC load).
2. **Wiring —** Refer to the Label Section on page 181. For Field-Side Wiring Diagrams, refer to the Wiring System web site information on page 186.
3. **Fusing —** Fuse holders are included with the IFM. Fuses (5 x 20 mm) are not included.
4. **Extra Terminals —** Two field-side terminals are internally connected on the IFM for each channel, and are available for power source common connections.
5. **Isolation —** The fuse clips and blown fuse indicators are isolated into 16 groups of terminals. This allows each output device to reference a different power source.
6. **Dimensions —** Refer to page 187.

1492-IFM40F-FS24A-4

Fusible 16 Individually Isolated 24V AC/DC with 4 Terminals/Input

Application Notes

1. **Compatibility —** To ensure proper operation with the I/O module, do **not** exceed the voltage and current ratings of the IFM.
2. **Wiring —** Refer to the Label Section on page 181. For Field-Side Wiring Diagrams, refer to the Wiring System web site information on page 186.
3. **Fusing —** Fuse holders are included with the IFM. Fuses (5 x 20 mm) are not included.
4. **Extra Terminals —** Two field-side terminals are internally connected on the IFM for each channel, and are available for power source common connections.
5. **Isolation —** The fuse clips and blown fuse indicators are isolated into 16 groups of terminals. This allows each input device to reference a different power source.
6. **Dimensions —** Refer to page 187.

Pinout

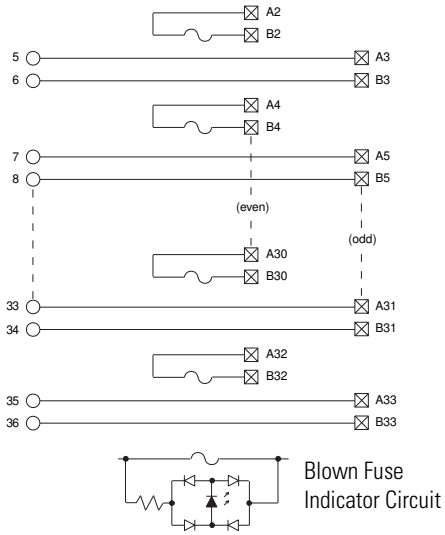

1492-IFM40F-FSA-4

Fusible 16 Individually Isolated 120V AC/DC 4 Terminals/Input

Application Notes

1. **Compatibility —** To ensure proper operation with the I/O module, do **not** exceed the voltage and current ratings of the IFM.
2. **Wiring —** Refer to the Label Section on page 181. For Field-Side Wiring Diagrams, refer to the Wiring System web site information on page 186.
3. **Fusing —** Fuse holders are included with the IFM. Fuses (5 x 20 mm) are not included.
4. **Extra Terminals —** Two field-side terminals are internally connected on the IFM for each channel, and are available for power source common connections.
5. **Isolation —** The fuse clips are isolated into 16 groups of terminals. This allows each input device to reference a different power source.
6. **Dimensions —** Refer to page 187.

Pinout

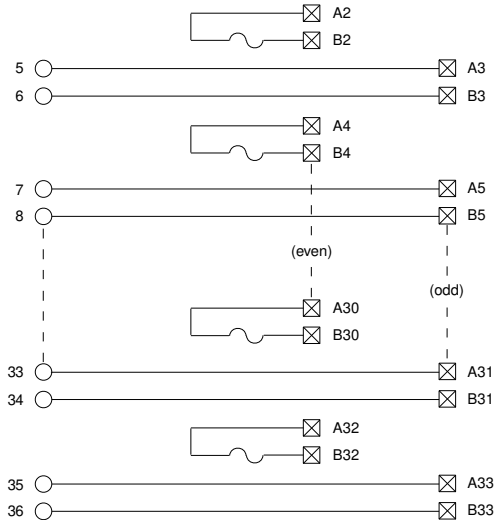

1492-IFM40F-FS120A-4
1492-RIFM40F-FS120A-4

Fusible 16 Individually Isolated with 120V AC/DC Blown Fuse LED Indicators & 4 Terminals/Input

Application Notes

1. **Compatibility —** To ensure proper operation with the I/O module, do **not** exceed the voltage and current ratings of the IFM.
2. **Wiring —** Refer to the Label Section on page 181. For Field-Side Wiring Diagrams, refer to the Wiring System web site information on page 186.
3. **Fusing —** Fuse holders are included with the IFM. Fuses (5 x 20 mm) are not included.
4. **Extra Terminals —** Two field-side terminals are internally connected on the IFM for each channel, and are available for power source common connections.
5. **Isolation —** The fuse clips and blown fuse indicators are isolated into 16 groups of terminals. This allows each input device to reference a different power source.
6. **Dimensions —** Refer to page 187.

Pinout

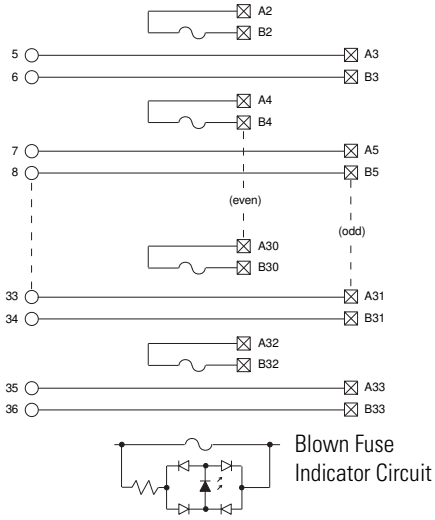

1492-IFM40F-FS240A-4

Fusible 16 Individually Isolated with 240V AC/DC Blown Fuse LED Indicators and 4 Terminals/Input

Application Notes

1. **Compatibility —** To ensure proper operation with the I/O module, do **not** exceed the voltage and current ratings of the IFM.
2. **Wiring —** Refer to the Label Section on page 181. For Field-Side Wiring Diagrams, refer to the Wiring System web site information on page 186.
3. **Fusing —** Fuse holders are included with the IFM. Fuses (5 x 20 mm) are not included.
4. **Extra Terminals —** Two field-side terminals are internally connected on the IFM for each channel, and are available for power source common connections.
5. **Isolation —** The fuse clips and blown fuse indicators are isolated into 16 groups of terminals. This allows each input device to reference a different power source.

Dimensions — Refer to page 187.

Pinout

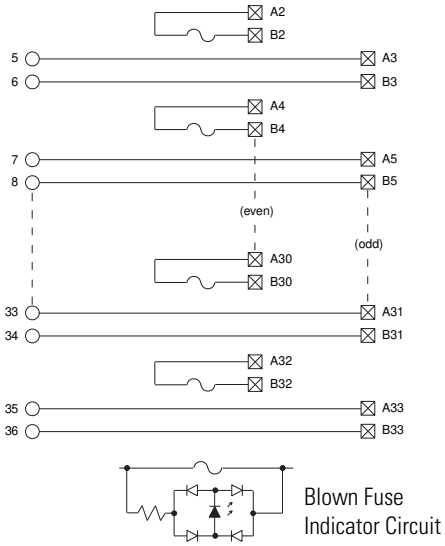

1492-XIM2024-8R

Relay Master (LED Indicating) 20-Pin Master with Eight (8) 24V DC Relays

Application Notes

1. **Compatibility —** To ensure proper operation with the I/O module, do **not** exceed the voltage and current ratings of the XIM.
2. **Wiring —** Refer to the Label Section on page 181. For Field-Side Wiring Diagrams, refer to the Wiring System web site information on page 186.
3. **Dimensions —** Refer to page 187.
4. **Maximum Relay Switching** — Refer to page 192.
5. LEDs provide PLC output ON/OFF indication.
6. With expansion module and cable (included with expansion module) can expand to 16 relays.

Pinout

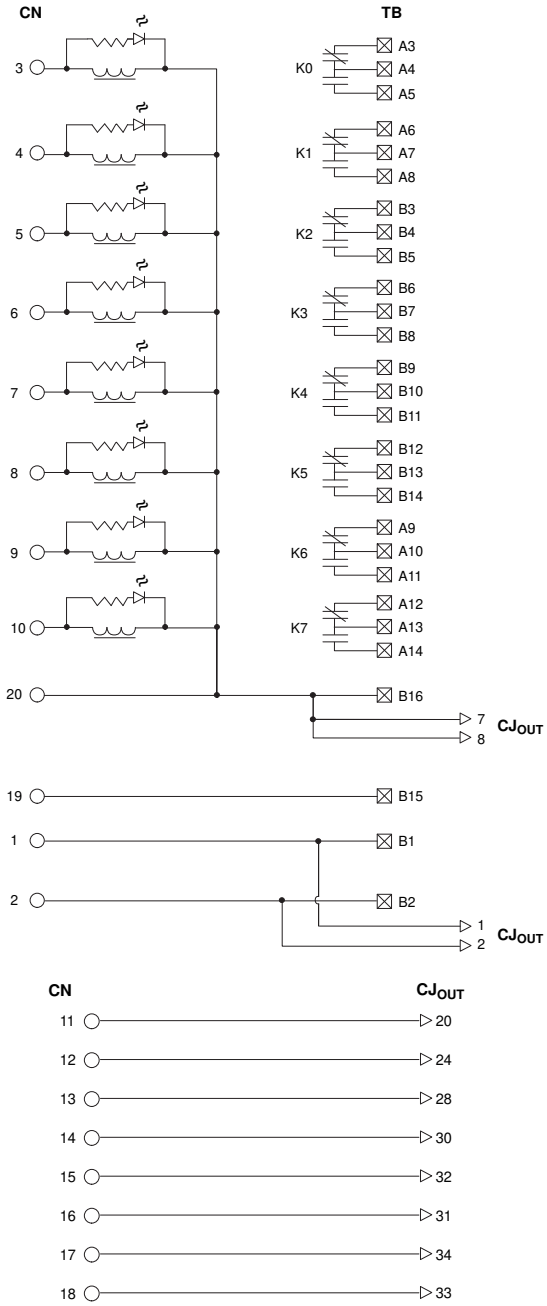

1492-XIM20120-8R

Relays Masters (LED Indicating) 20-Pin Master with Eight (8) 120V AC Relays

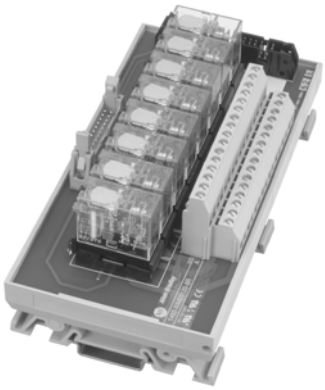

Application Notes

1. **Compatibility —** To ensure proper operation with the I/O module, do **not** exceed the voltage and current ratings of the XIM.
2. **Wiring —** Refer to the Label Section on page 181. For Field-Side Wiring Diagrams, refer to the Wiring System web site information on page 186.
3. **Dimensions —** Refer to page 187.
4. **Maximum Relay Switching** — Refer to page 192.
5. LEDs provide PLC output ON/OFF indication.
6. With expansion module and cable (included with expansion module) can expand to 16 relays.

Pinout

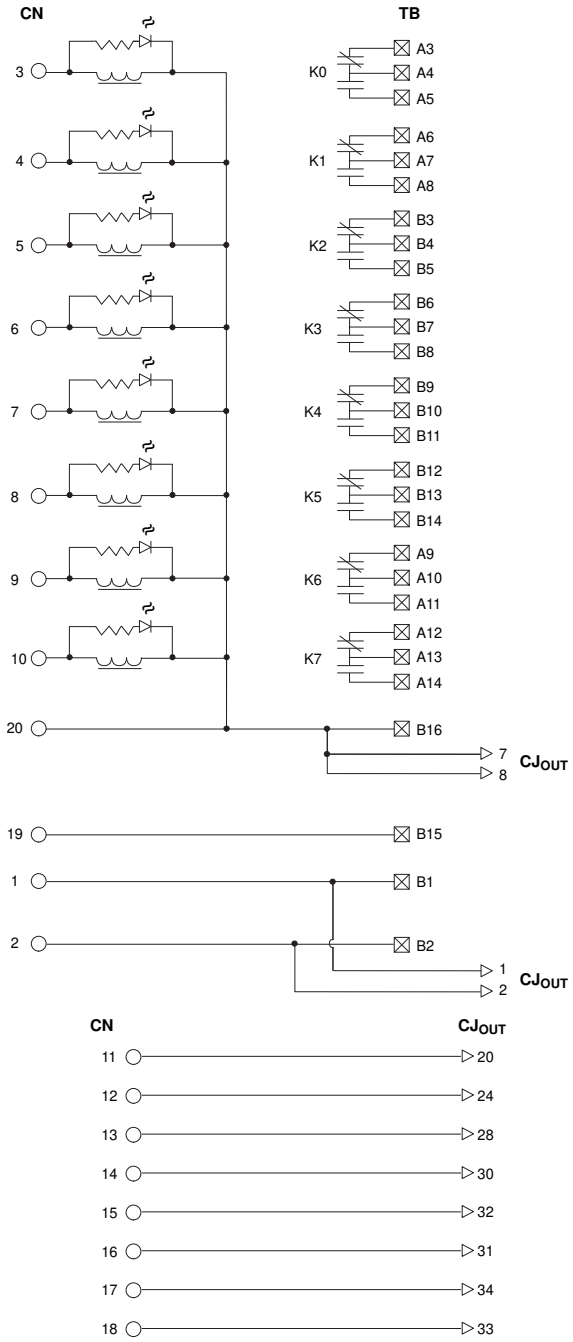

1492-XIM2024-16R

Relays Master (LED Indicating) 20-Pin Master with Sixteen (16) 24V DC Relays

Application Notes

1. **Compatibility —** To ensure proper operation with the I/O module, do **not** exceed the voltage and current ratings of the XIM.
2. **Wiring —** Refer to the Label Section on page 181. For Field-Side Wiring Diagrams, refer to the Wiring System web site information on page 186.
3. **Dimensions —** Refer to page 187.
4. **Maximum Relay Switching** — Refer to page 192.
5. LEDs provide PLC output ON/OFF indication.
6. No expansion capability.

Pinout

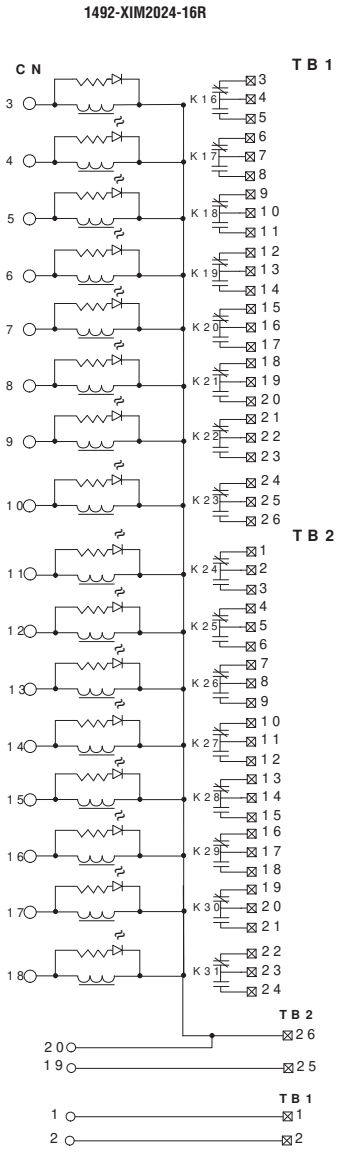

1492-XIM2024-16RF

Relay Master (LED Indicating) 20-Pin Master with Sixteen (16) 24V DC Relays with Fusing

Application Notes

1. **Compatibility —** To ensure proper operation with the I/O module, do **not** exceed the voltage and current ratings of the XIM.
2. **Wiring —** Refer to the Label Section on page 181. For Field-Side Wiring Diagrams, refer to the Wiring System web site information on page 186.
3. **Dimensions —** Refer to 187.
4. **Maximum Relay Switching** — Refer to page 192.
5. LEDs provide PLC output ON/OFF indication.
6. No expansion capability.

Pinout

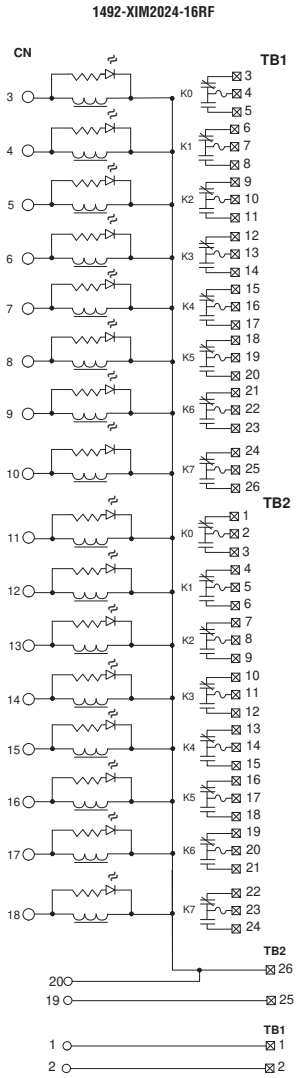

1492-XIM20120-16R

Relay Master (LED Indicating) 20-Pin Master with Sixteen (16) 120V AC Relays

Application Notes

1. **Compatibility —** To ensure proper operation with the I/O module, do **not** exceed the voltage and current ratings of the XIM.
2. **Wiring —** Refer to the Label Section on page 181. For Field-Side Wiring Diagrams, refer to the Wiring System web site information on page 186.
3. **Dimensions —** Refer to page 187.
4. **Maximum Relay Switching** — Refer to page 192.
5. LEDs provide PLC output ON/OFF indication.
6. No expansion capability.

Pinout

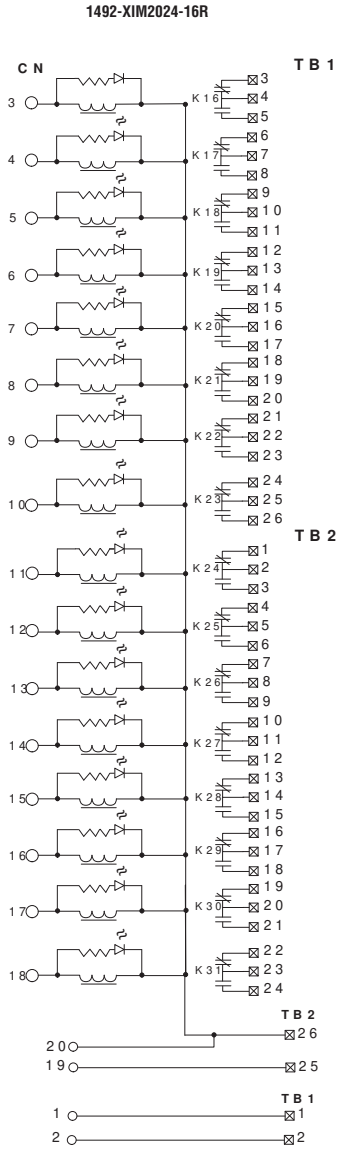

1492-XIM20120-16RF

Relay Master (LED Indicating) 20-Pin Master with Sixteen (16) 120V AC Relays with Fusing

Application Notes

1. **Compatibility —** To ensure proper operation with the I/O module, do **not** exceed the voltage and current ratings of the XIM.
2. **Wiring —** Refer to the Label Section on page 181. For Field-Side Wiring Diagrams, refer to the Wiring System web site information on page 186.
3. **Dimensions —** Refer to page 187.
4. **Maximum Relay Switching** — Refer to page 192.
5. LEDs provide PLC output ON/OFF indication.
6. No expansion capability.

Pinout

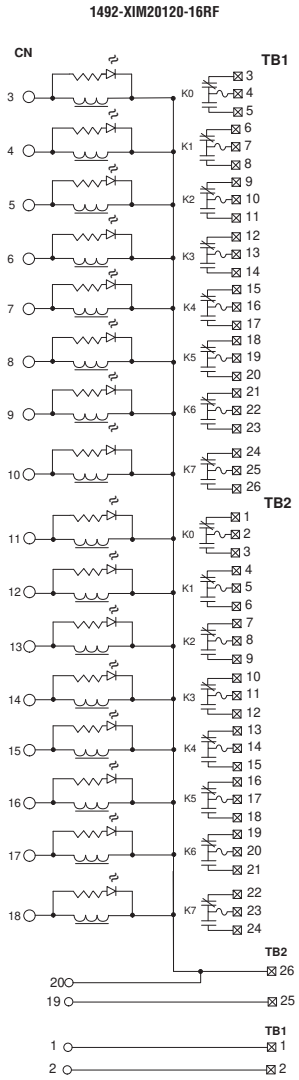

1492-XIM4024-8R

Relay Master (LED Indicating) 40-Pin Master with Eight (8) 24V DC Relays

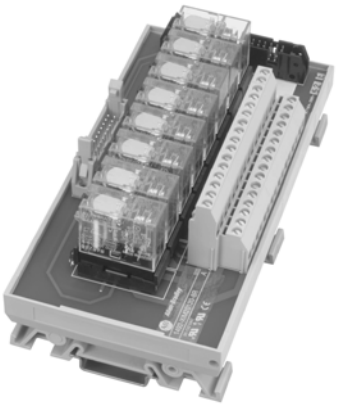

Application Notes

1. **Compatibility —** To ensure proper operation with the I/O module, do **not** exceed the voltage and current ratings of the XIM.
2. **Wiring —** Refer to the Label Section on page 181. For Field-Side Wiring Diagrams, refer to the Wiring System web site information on page 186.
3. **Dimensions —** Refer to page 187.
4. **Maximum Relay Switching** — Refer to page 192.
5. LEDs provide PLC output ON/OFF indication.
6. With expansion module(s) and cable (included with expansion module) can expand to 32 relays.

Pinout

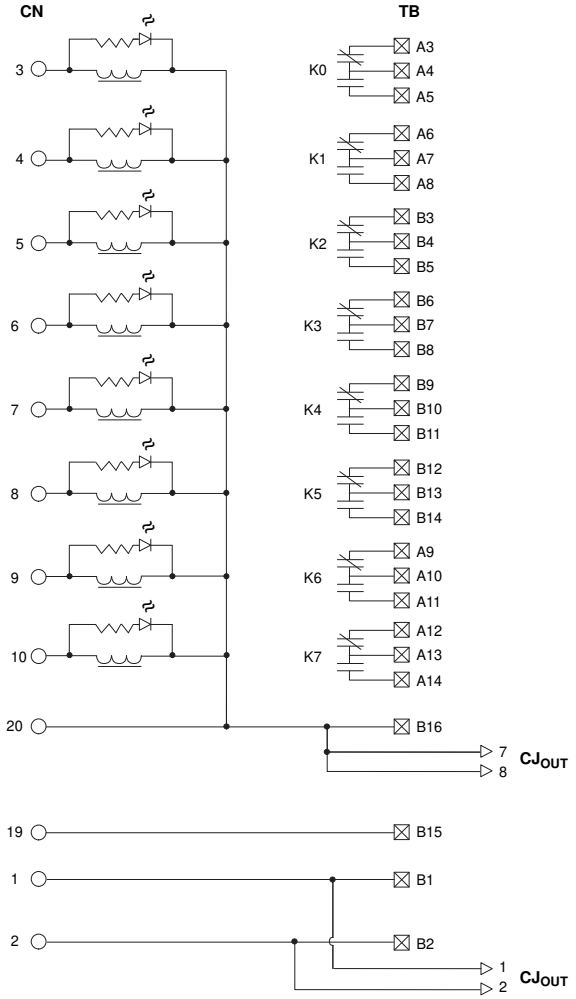

1492-XIM4024-8R, Continued

Pinout, Continued

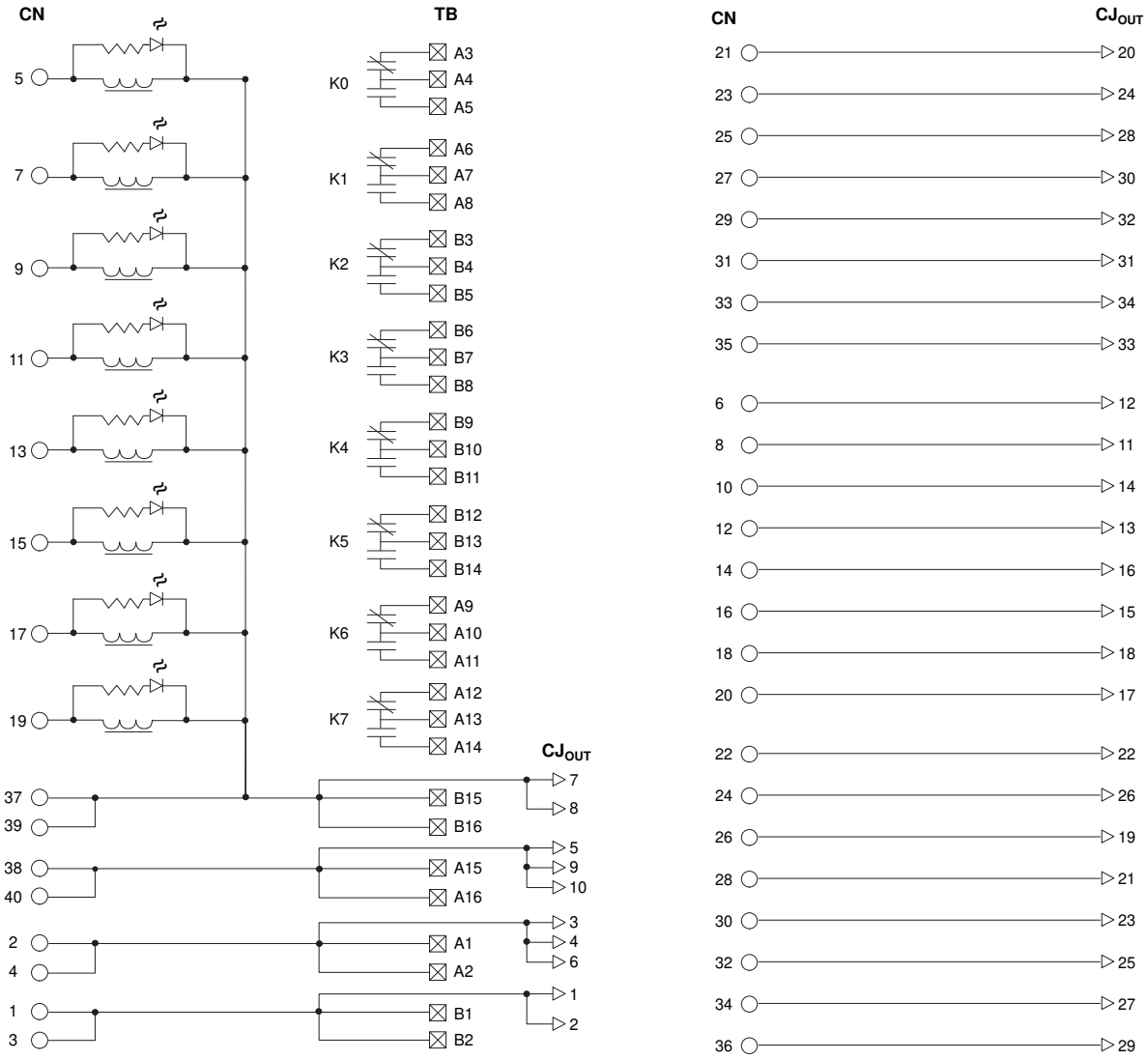

1492-XIM4024-16R
1492-RXIM4024-16R

Relay Master (LED Indicating) 40-Pin Master with Sixteen (16) 24V DC Relays

Application Notes

1. **Compatibility —** To ensure proper operation with the I/O module, do **not** exceed the voltage and current ratings of the XIM.
2. **Wiring —** Refer to the Label Section on page 181. For Field-Side Wiring Diagrams, refer to the Wiring System web site information on page 186.
3. **Dimensions —** Refer to page 187.
4. **Maximum Relay Switching** — Refer to page 192.
5. LEDs provide PLC output ON/OFF indication.
6. With expansion module(s) and cable(s) (included with expansion module) can expand to 32 relays.

Pinout

Refer to page 125.

1492-XIM4024-16R
1492-RXIM4024-16R, Continued

Pinout, Continued

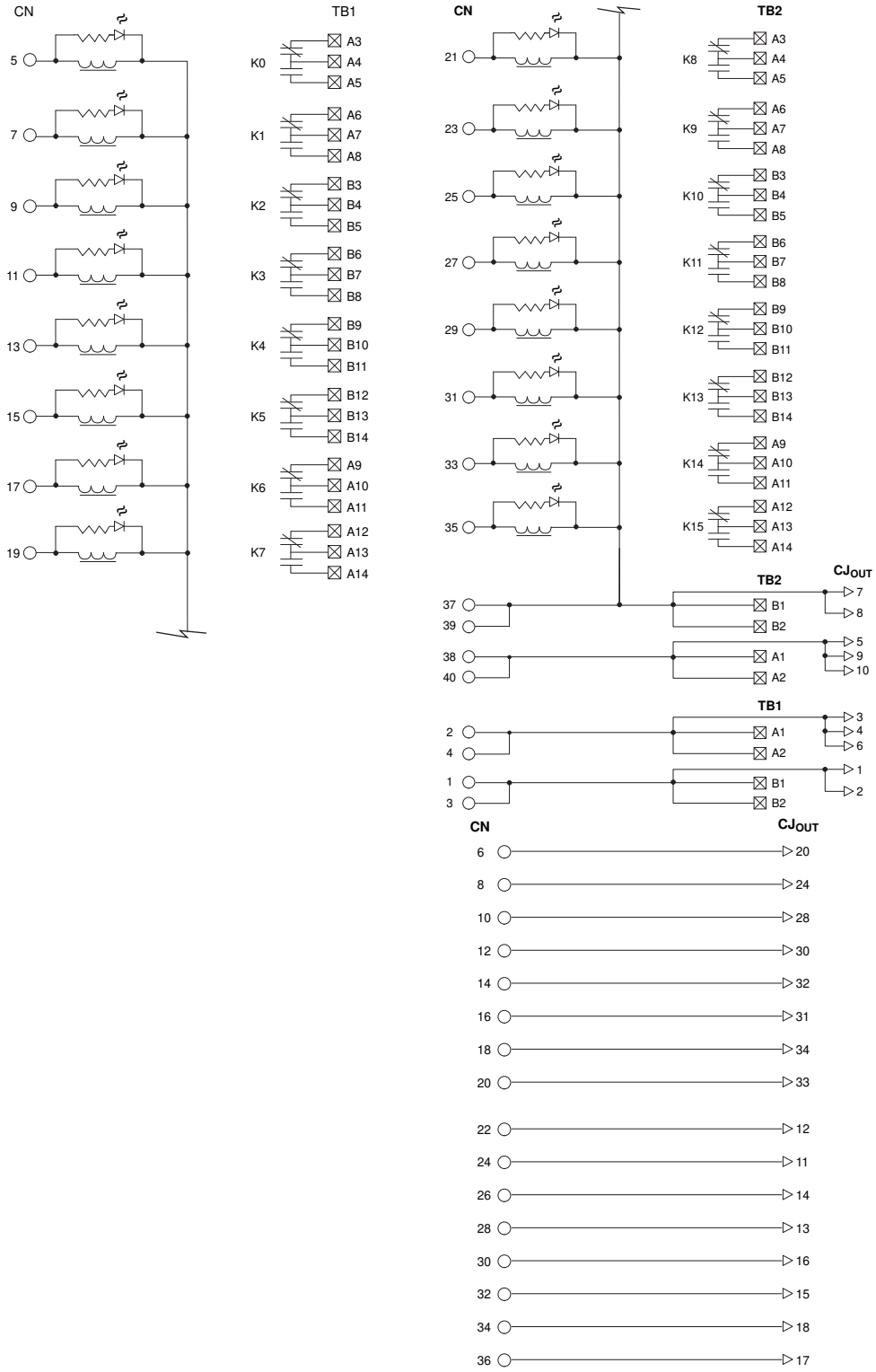

1492-XIM4024-16RF

Relay Master (LED Indicating) 40-Pin Master with Sixteen (16) 24V DC Relays with Fusing

Application Notes

1. **Compatibility —** To ensure proper operation with the I/O module, do **not** exceed the voltage and current ratings of the XIM.
2. **Wiring —** Refer to the Label Section on page 181. For Field-Side Wiring Diagrams, refer to the Wiring System web site information on page 186.
3. **Dimensions —** Refer to page 187.
4. **Maximum Relay Switching** — Refer to page 192.
5. LEDs provide PLC output ON/OFF indication.
6. With expansion module(s) and cable(s) (included with expansion module) can expand to 32 relays.

Pinout

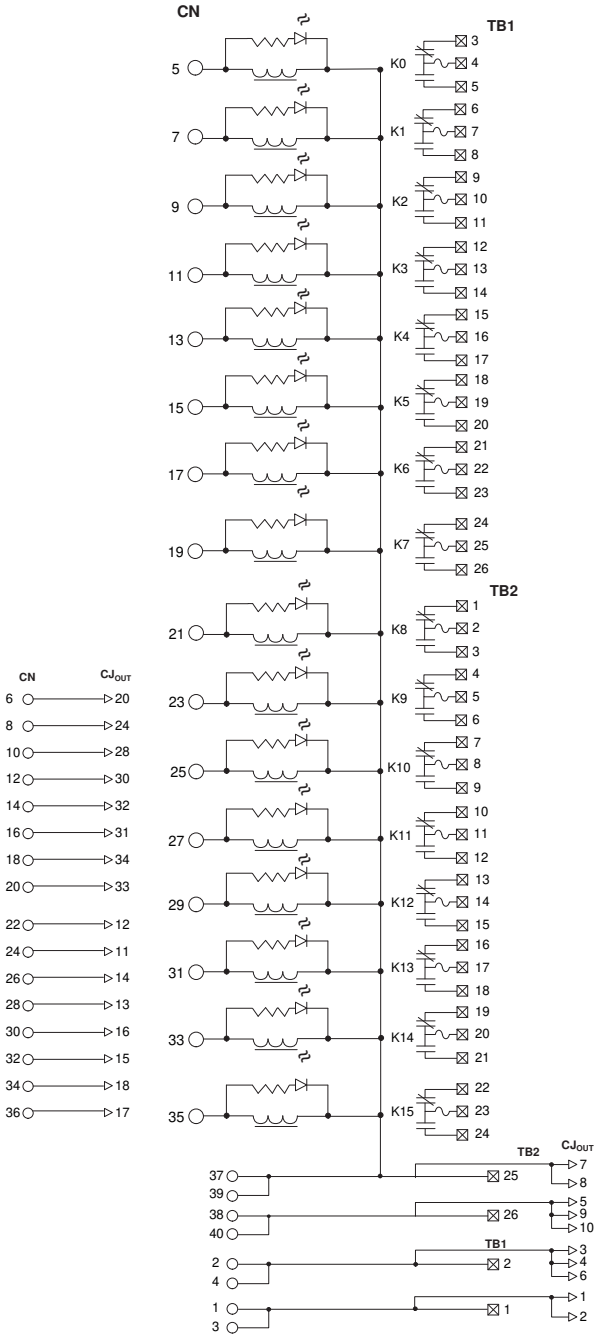

1492-XIM24-8R

1492-RXIM24-8R

Relay Expander (LED Indicating) with Eight (8) 24V DC Relays

Application Notes

1. **Compatibility —** To ensure proper operation with the I/O module, do **not** exceed the voltage and current ratings of the XIM.
2. **Wiring —** Refer to the Label Section on page 181. For Field-Side Wiring Diagrams, refer to the Wiring System web site information on page 186.
3. This relay expander must be used with a 24V DC relay master.
4. **Dimensions —** Refer to page 187.
5. **Maximum Relay Switching** — Refer to page 192.
6. LEDs provide PLC output ON/OFF indication.

Pinout

Refer to page 128.

1492-XIM24-8R, Continued
1492-RXIM24-8R, Continued

Pinout, Continued

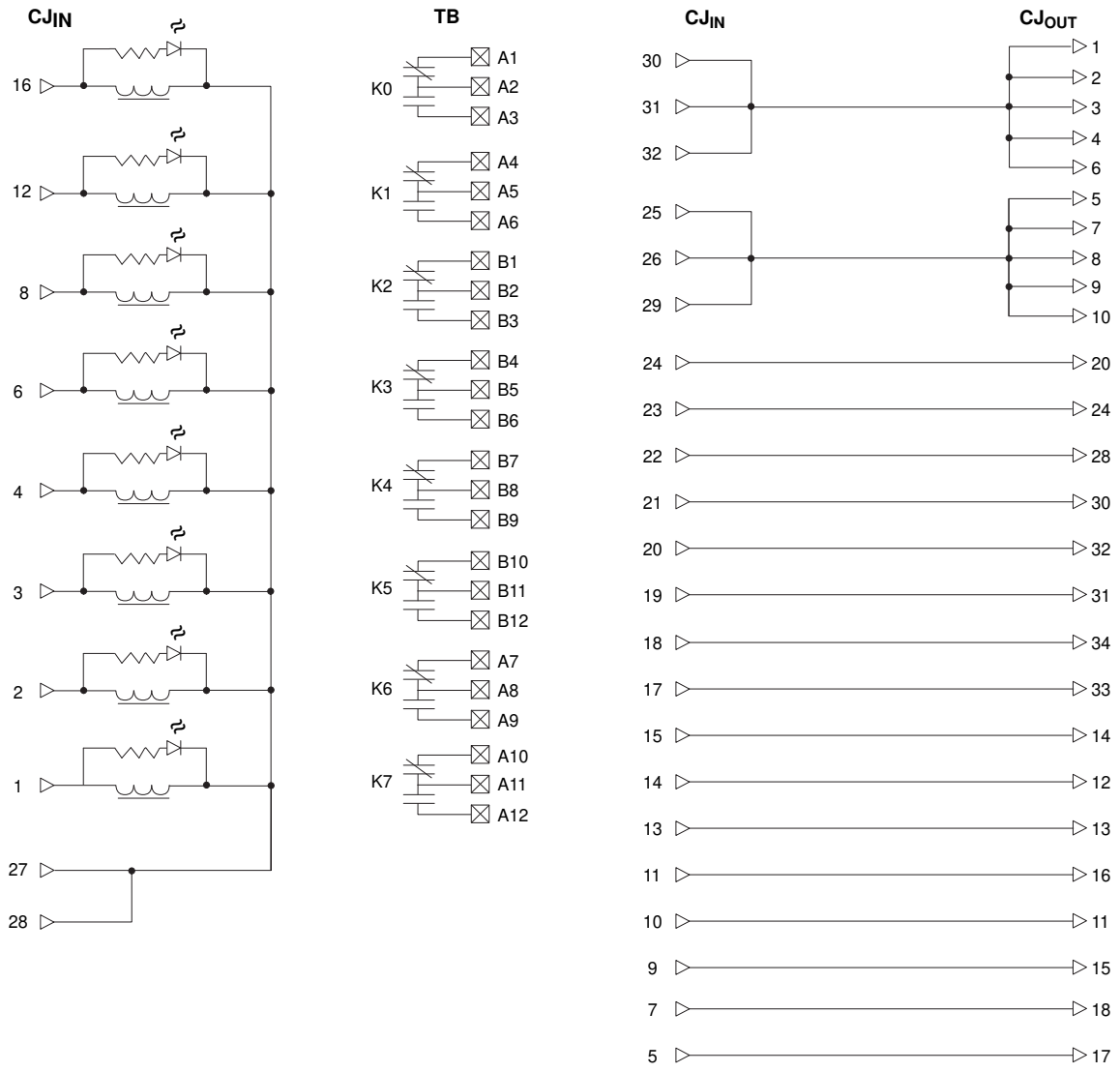

1492-XIM120-8R

Relay Expander (LED Indicating) with Eight (8) 120V AC Relays

Application Notes

1. **Compatibility —** To ensure proper operation with the I/O module, do **not** exceed the voltage and current ratings of the XIM.
2. **Wiring —** Refer to the Label Section on page 181. For Field-Side Wiring Diagrams, refer to the Wiring System web site information on page 186.
3. This relay expander must be used with a 120V AC relay master.
4. **Dimensions —** Refer to page 187.
5. **Maximum Relay Switching** — Refer to page 192.
6. LEDs provide PLC output ON/OFF indication.

Pinout

Refer to page 130.

1492-XIM120-8R, Continued

Pinout, Continued

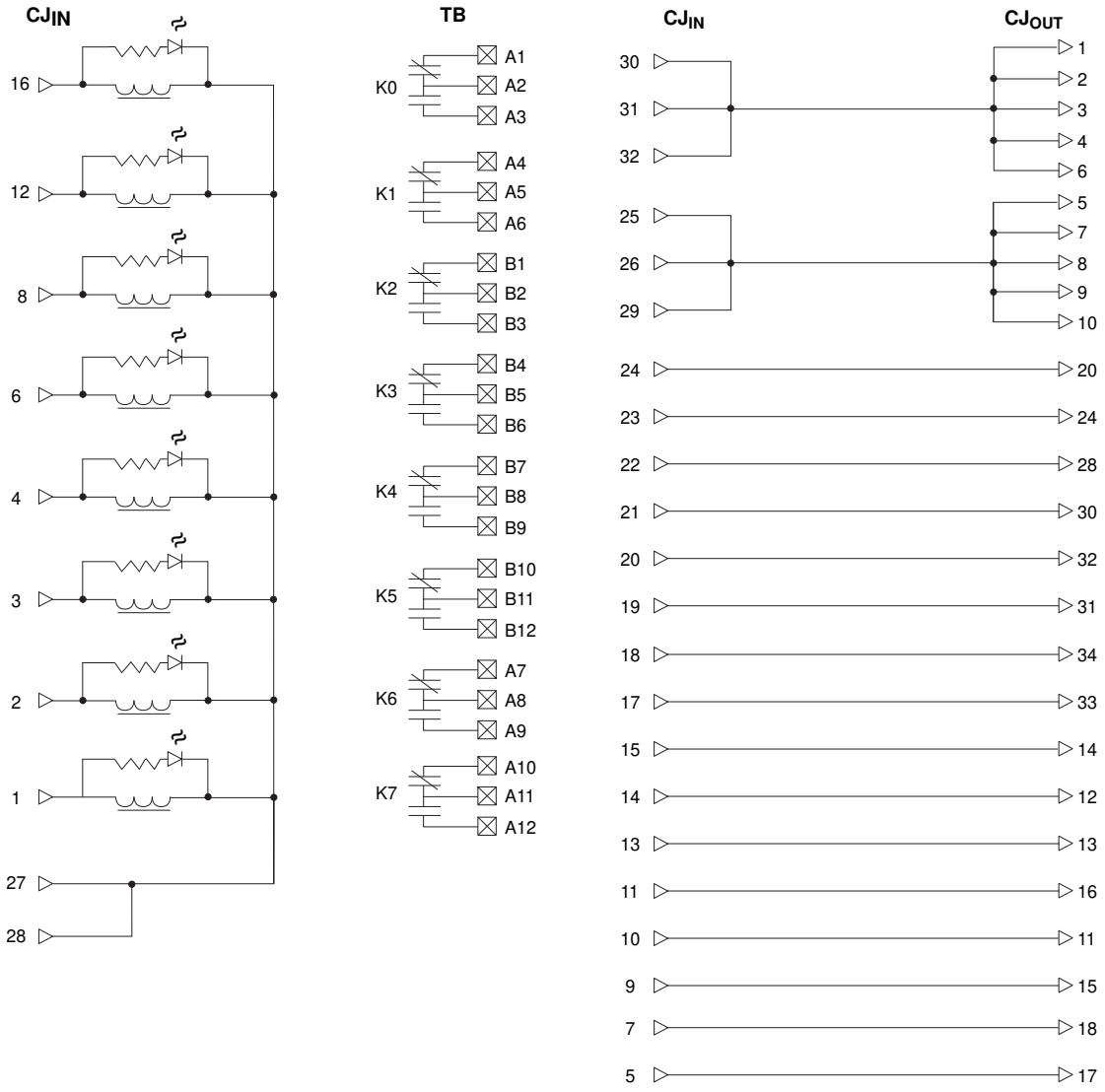

1492-XIM24-16RF

Expander with Sixteen (16) 24V DC Relays with Fusing

Application Notes

1. **Compatibility —** To ensure proper operation with the I/O module, do **not** exceed the voltage and current ratings of the XIM.
2. **Wiring —** Refer to the Label Section on page 181. For Field-Side Wiring Diagrams, refer to the Wiring System web site information on page 186.
3. This relay expander must be used with a 24 VDC relay master.
4. **Dimensions —** Refer to page 187.
5. **Maximum Relay Switching** — Refer to page 192.
6. LEDs provide PLC output ON/OFF indication.

Pinout

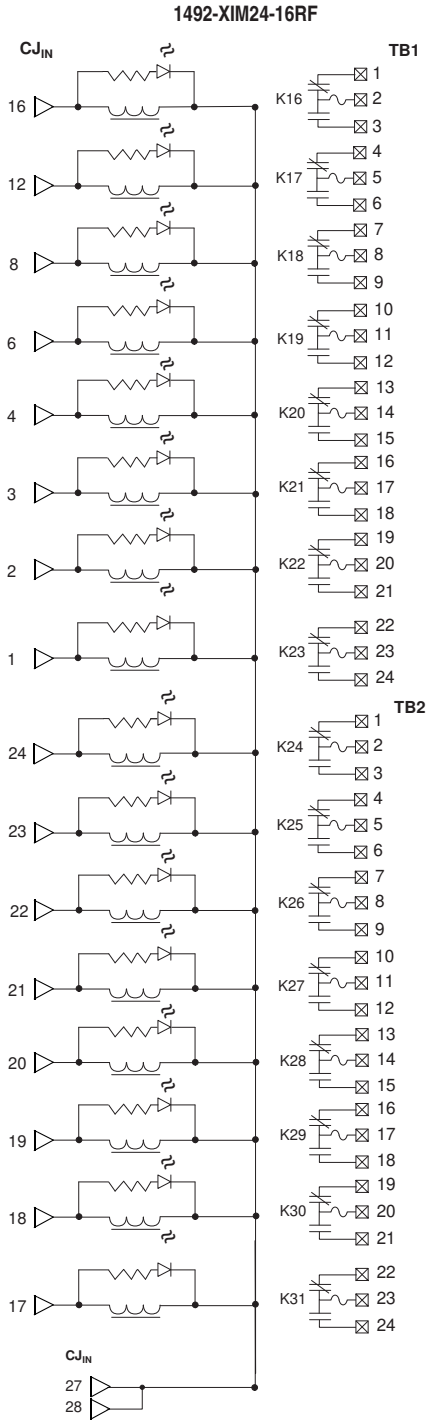

1492-XIMF-F24-2

Fusible 8-Channel Expander with 24V DC Blown Fuse Indicators

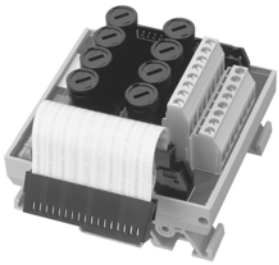

Application Notes

1. **Compatibility —** To ensure proper operation with the I/O module, do **not** exceed the voltage and current ratings of the XIM.
2. **Wiring —** Refer to the Label Section on page 181. For Field-Side Wiring Diagrams, refer to the Wiring System web site information on page 186.
3. **Extra Terminals —** Eight field-side terminals are jumpered together on the XIM. For some I/O modules, the terminals are also internally connected to module common through the pre-wired cable. Refer to the XIM and CABLE pinouts.
4. **Dimensions —** Refer to page 187.
5. LEDs provide blown fuse indication.

Pinout

Refer to page 133.

1492-XIMF-F24-2, Continued

Pinout, Continued

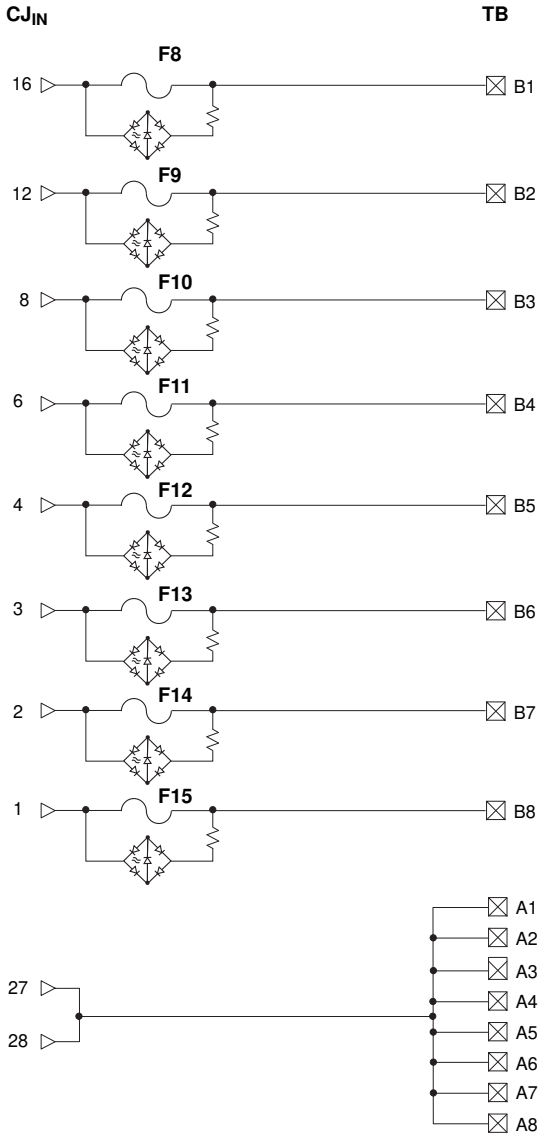

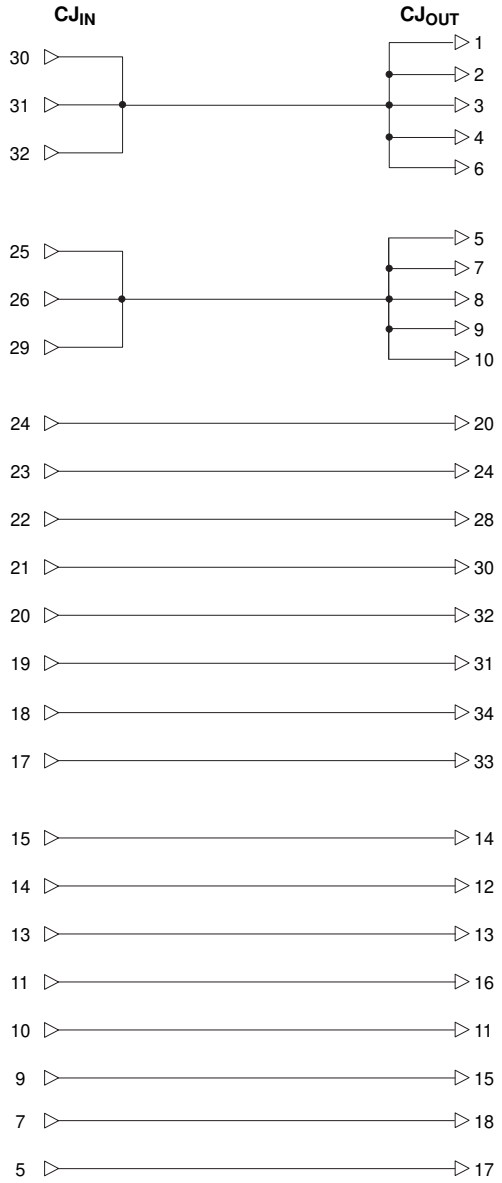

1492-XIMF-F120-2

Fusible 8-Channel Expander with 120V AC Blown Fuse Indicators

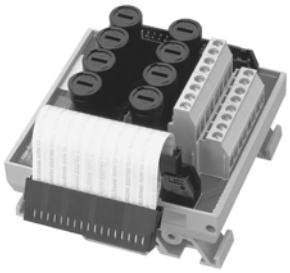

Application Notes

1. **Compatibility —** To ensure proper operation with the I/O module, do **not** exceed the voltage and current ratings of the XIM.
2. **Wiring —** Refer to the Label Section on page 181. For Field-Side Wiring Diagrams, refer to the Wiring System web site information on page 186.
3. **Extra Terminals —** Eight field-side terminals are jumpered together on the XIM. For some I/O modules, the terminals are also internally connected to module common through the pre-wired cable. Refer to the XIM and CABLE pinouts.
4. **Dimensions —** Refer to page 187.
5. LEDs provide blown fuse indication.

Pinout

Refer to page 135.

1492-XIMF-F120-2, Continued

Pinout, Continued

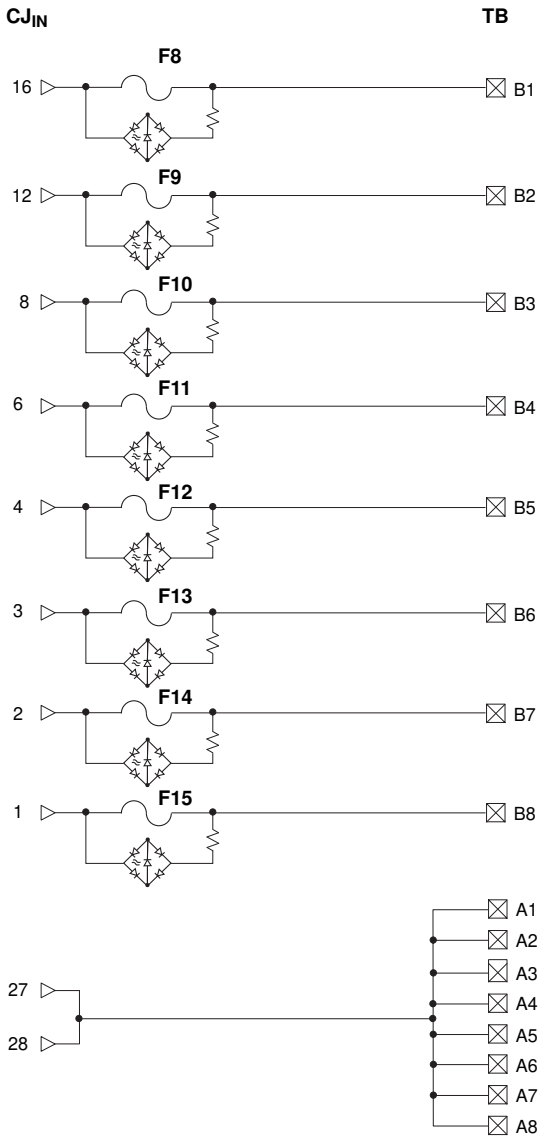

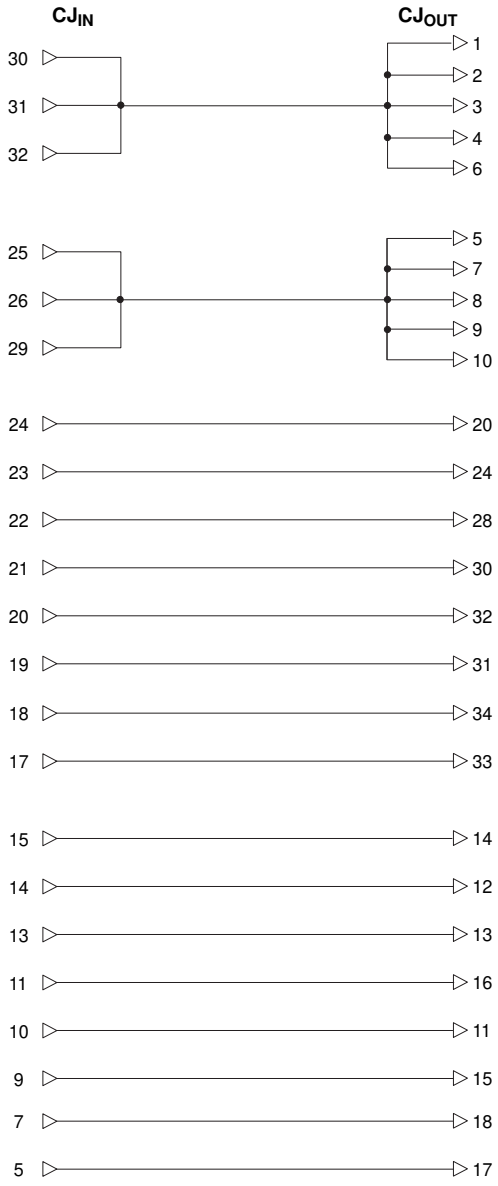

1492-XIMF-2

Expander with Eight (8) Feed-Through Channels

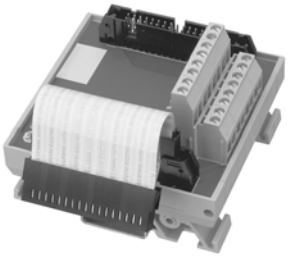

Application Notes

1. **Compatibility —** To ensure proper operation with the I/O module, do **not** exceed the voltage and current ratings of the XIM.
2. **Wiring —** Refer to the Label Section on page 181. For Field-Side Wiring Diagrams, refer to the Wiring System web site information on page 186.
3. **Extra Terminals —** Eight field-side terminals are jumpered together on the XIM. For some I/O modules, the terminals are also internally connected to module common through the pre-wired cable. Refer to the XIM and CABLE pinouts.
4. **Dimensions —** Refer to page 187.

Pinout

Refer to page 137.

1492-XIMF-2, Continued

Pinout, Continued

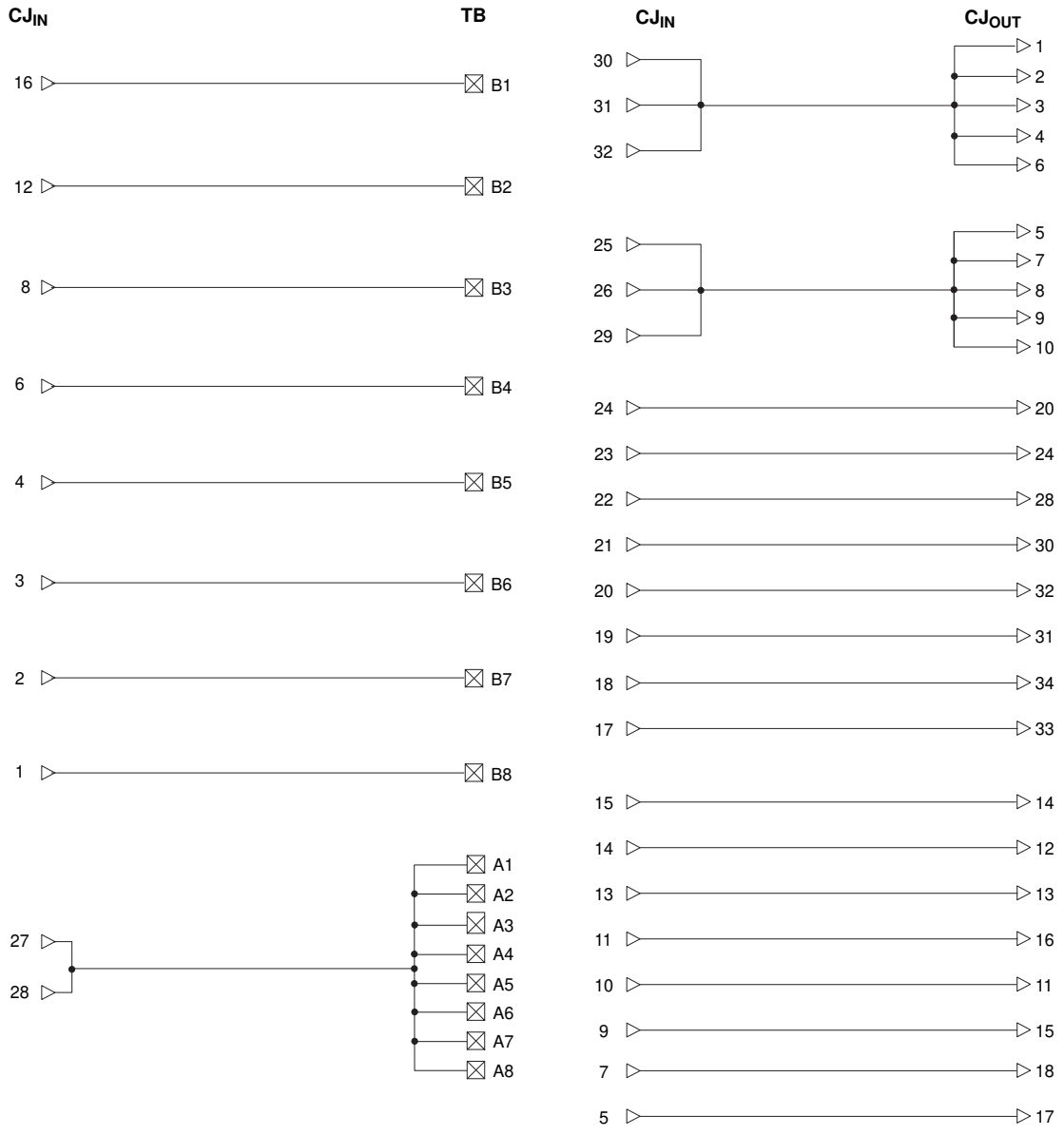

Digital Cable Specifications

Bulletin 1492 pre-wired cables are designed to minimize control wiring in a panel. Digital pre-wired cables, when used with an IFM or XIM, replace the point-to-point wiring between Allen-Bradley programmable controller I/O modules and individual terminal blocks. The digital ready-to-wire cables provide one end of the cable pre-terminated, for either an IFM (IFM-ready cable) or a programmable controller I/O module (I/O module-ready cable).

Pre-Wired Cables

Specifications

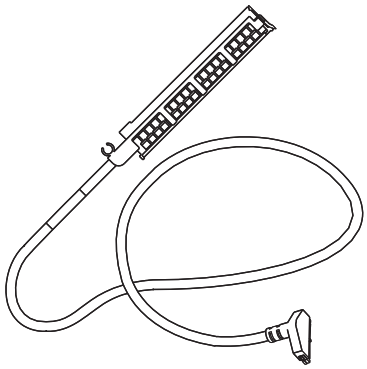

The pre-wired cables have a Bulletin 1746 Removable Terminal Block, 1756 Removable Terminal Block, 1769 Removable Terminal Block, or 1771 Wiring Arm on one end and a cable connector on the other to connect to the IFM or XIM. The broad offering of digital pre-wired cables supports over 100 different 16- and 32-point Bulletin 1746, 1756, 1769, 1794, and 1771 digital I/O modules.

Digital Cable Specifications, Continued

Pre-Wired Cables, Continued

Digital Pre-Wired Cable Specifications

Catalog Number	Standard Cable Lengths	Insulation Rating	No. of Conductors	Conductor Size	Nominal Outer Diameter	I/O Module Connector
1492-CABLE❶A	0.5, 1.0, 2.5, 5.0 m	300V 80°C	20	#22 AWG	9.0 mm (0.36 in.)	1746-RT25R Red Removable Terminal Block
1492-CABLE❶B	0.5, 1.0, 2.5, 5.0 m	300V 80°C	20	#22 AWG	9.0 mm (0.36 in.)	1746-RT25B Blue Removable Terminal Block
1492-CABLE❶C	0.5, 1.0, 2.5, 5.0 m	300V 80°C	20	#22 AWG	9.0 mm (0.36 in.)	1746-RT25R Red Removable Terminal Block
1492-CABLE❶CR	0.5, 1.0, 2.5, 5.0 m	300V 80°C	20	#22 AWG	9.0 mm (0.36 in.)	1746-RT25R Red Removable Terminal Block
1492-CABLE❶D	0.5, 1.0, 2.5, 5.0 m	300V 80°C	20	#22 AWG	9.0 mm (0.36 in.)	1746-RT25C Orange Removable Terminal Block
1492-CABLE❶E	0.5, 1.0, 2.5, 5.0 m	300V 80°C	20	#22 AWG	9.0 mm (0.36 in.)	1746-RT25B Blue Removable Terminal Block
1492-CABLE❶F	0.5, 1.0, 2.5, 5.0 m	300V 80°C	20	#22 AWG	9.0 mm (0.36 in.)	1771-WH (16-Point/21 Terminal) Wiring Arm
1492-CABLE❶FF	0.5, 1.0, 2.5, 5.0 m	300V 80°C	20	#22 AWG	9.0 mm (0.36 in.)	1771-WHF (16-Point/21 Terminal) Fused Wiring Arm
1492-CABLE❶G	0.5, 1.0, 2.5, 5.0 m	300V 80°C	20	#22 AWG	9.0 mm (0.36 in.)	1746-RT25R Red Removable Terminal Block
1492-CABLE❶H	0.5, 1.0, 2.5, 5.0 m	300V 80°C	40	#22 AWG	11.7 mm (0.46 in.)	1746-N3 40-Pin Cable Connector
1492-CABLE❶J	0.5, 1.0, 2.5, 5.0 m	300V 80°C	40	#22 AWG	11.7 mm (0.46 in.)	1771-WN (32-Point/40 Terminal) Wiring Arm
1492-CABLE❶K	0.5, 1.0, 2.5, 5.0 m	300V 80°C	40	#22 AWG	11.7 mm (0.46 in.)	1771-WN (32-Point/40 Terminal) Wiring Arm
1492-CABLE❶L	0.5, 1.0, 2.5, 5.0 m	300V 80°C	40	#22 AWG	11.7 mm (0.46 in.)	1771-WN (32-Point/40 Terminal) Wiring Arm
1492-CABLE❶M	0.5, 1.0, 2.5, 5.0 m	300V 80°C	40	#22 AWG	11.7 mm (0.46 in.)	1771-WN (32-Point/40 Terminal) Wiring Arm
1492-CABLE❶N	0.5, 1.0, 2.5, 5.0 m	300V 80°C	20	#22 AWG	9.0 mm (0.36 in.)	1746-RT25C Orange Removable Terminal Block
1492-CABLE❶R	0.5, 1.0, 2.5, 5.0 m	300V 80°C	40	#22 AWG	11.7 mm (0.46 in.)	1771-WN (32-Point/40 Terminal) Wiring Arm
1492-CAB❶R71	0.5, 1.0, 2.5, 5.0 m	300V 80°C	40	#22 AWG	11.7 mm (0.46 in.)	1771-WN (32-Point/40 Terminal) Wiring Arm
1492-CABLE❶S	0.5, 1.0, 2.5, 5.0 m	300V 80°C	20	#22 AWG	9.0 mm (0.36 in.)	1746-RT25C Orange Removable Terminal Block
1492-CABLE❶T	0.5, 1.0, 2.5, 5.0 m	300V 80°C	20	#22 AWG	11.7 mm (0.46 in.)	1771-WA (8-Point/10 Terminal) Wiring Arm
1492-CABLE❶U	0.5, 1.0, 2.5, 5.0 m	300V 80°C	20	#22 AWG	9.0 mm (0.36 in.)	1756-TBNH Removable Terminal Block
1492-CABLE❶V	0.5, 1.0, 2.5, 5.0 m	300V 80°C	20	#22 AWG	9.0 mm (0.36 in.)	1756-TBNH Removable Terminal Block
1492-CABLE❶W	0.5, 1.0, 2.5, 5.0 m	300V 80°C	20	#22 AWG	9.0 mm (0.36 in.)	1756-TBNH Removable Terminal Block
1492-CABLE❶X	0.5, 1.0, 2.5, 5.0 m	300V 80°C	20	#22 AWG	9.0 mm (0.36 in.)	1756-TBNH Removable Terminal Block
1492-CABLE❶Y	0.5, 1.0, 2.5, 5.0 m	300V 80°C	40	#22 AWG	11.7 mm (0.46 in.)	1756-TBCH Removable Terminal Block
1492-CABLE❶Z	0.5, 1.0, 2.5, 5.0 m	300V 80°C	40	#22 AWG	11.7 mm (0.46 in.)	1756-TBCH Removable Terminal Block
1492-CAB❶A62	0.5, 1.0, 2.5, 5.0 m	300V 80°C	40	#22 AWG	11.7 mm (0.46 in.)	1762-L40xxx Input Terminal
1492-CAB❶B62	0.5, 1.0, 2.5, 5.0 m	300V 80°C	40	#22 AWG	11.7 mm (0.46 in.)	1762-L40xxx Output Terminal
1492-CAB❶A64	0.5, 1.0, 2.5, 5.0 m	300V 80°C	20	#22 AWG	9.0 mm (0.36 in.)	1764-24AWA, -24BWA Input Terminal
1492-CAB❶B64	0.5, 1.0, 2.5, 5.0 m	300V 80°C	20	#22 AWG	9.0 mm (0.36 in.)	1764-28BXB Input Terminal
1492-CAB❶C64	0.5, 1.0, 2.5, 5.0 m	300V 80°C	20	#22 AWG	9.0 mm (0.36 in.)	1764-24AWA, -24BWA Output Terminal
1492-CAB❶F64	0.5, 1.0, 2.5, 5.0 m	300V 80°C	20	#22 AWG	9.0 mm (0.36 in.)	1764-28BXB Output Terminal
1492-CAB❶A69	0.5, 1.0, 2.5, 5.0 m	300V 80°C	20	#22 AWG	9.0 mm (0.36 in.)	1769-RTBN18 Removable Terminal Block
1492-CAB❶B69	0.5, 1.0, 2.5, 5.0 m	300V 80°C	20	#22 AWG	9.0 mm (0.36 in.)	1769-RTBN18 Removable Terminal Block
1492-CAB❶C69	0.5, 1.0, 2.5, 5.0 m	300V 80°C	20	#22 AWG	9.0 mm (0.36 in.)	1769-RTBN10 Removable Terminal Block
1492-CAB❶D69	0.5, 1.0, 2.5, 5.0 m	300V 80°C	20	#22 AWG	9.0 mm (0.36 in.)	1769-RTBN18 Removable Terminal Block
1492-CAB❶E69	0.5, 1.0, 2.5, 5.0 m	300V 80°C	20	#22 AWG	9.0 mm (0.36 in.)	1769-RTBN18 Removable Terminal Block
1492-CAB❶F69	0.5, 1.0, 2.5, 5.0 m	300V 80°C	20	#22 AWG	9.0 mm (0.36 in.)	1769-RTBN18 Removable Terminal Block
1492-CAB❶G69	0.5, 1.0, 2.5, 5.0 m	300V 80°C	20	#22 AWG	9.0 mm (0.36 in.)	1769-RTBN18 Removable Terminal Block
1492-CAB❶H69	0.5, 1.0, 2.5, 5.0 m	300V 80°C	20	#22 AWG	9.0 mm (0.36 in.)	1769-RTBN18 Removable Terminal Block

Digital Pre-Wired Cable Specifications (Continued)

Catalog Number	Standard Cable Lengths	Insulation Rating	No. of Conductors	Conductor Size	Nominal Outer Diameter	I/O Module Connector
1492-CAB❶J69	0.5, 1.0, 2.5, 5.0 m	300V 80°C	40	#22 AWG	11.1 mm (0.46 in.)	(2) 1769-RTBN18 Removable Terminal Block
1492-CAB❶K69	0.5, 1.0, 2.5, 5.0 m	300V 80°C	40	#22 AWG	11.1 mm (0.46 in.)	(2) 1769-RTBN18 Removable Terminal Block
1492-CAB❶L69	0.5, 1.0, 2.5, 5.0 m	300V 80°C	20	#22 AWG	9.0 mm (0.36 in.)	1769-RTBN18 Removable Terminal Block
1492-CAB❶M69	0.5, 1.0, 2.5, 5.0 m	300V 80°C	20	#22 AWG	9.0 mm (0.36 in.)	1769-RTBN18 Removable Terminal Block
1492-CAB❶A7H	0.5, 1.0, 2.5, 5.0 m	300V 80°C	20	#22 AWG	9.0 mm (0.36 in.)	20C-DA1-A and 20C-D01 Terminals
1492-CAB❶A7S	0.5, 1.0, 2.5, 5.0 m	300V 80°C	20	#22 AWG	9.0 mm (0.36 in.)	20C-DB1-A and 20C-D01 Terminals
1492-CAB❶B7H	0.5, 1.0, 2.5, 5.0 m	300V 80°C	20	#22 AWG	9.0 mm (0.36 in.)	TB2
1492-CAB❶A94	0.5, 1.0, 2.5, 5.0 m	300V 80°C	20	#22 AWG	9.0 mm (0.36 in.)	37-Pin male D-shell ❷
1492-CAB❶B94	0.5, 1.0, 2.5, 5.0 m	300V 80°C	40	#22 AWG	11.7 mm (0.46 in.)	62-Pin male D-shell ❸

❶ Cables are available in standard lengths of 0.5 m, 1.0 m, 2.5 m, and 5.0 m. To order, insert the code for the desired cable length into the catalog number (005 = 0.5 m, 010 = 1.0 m, 025 = 2.5 m, and 050 = 5.0 m). Example: **Catalog Number 1492-CABLE005A** is for a 0.5 m cable for the 1746-IA16 I/O Module. Also refer to Build-to-Order Length Cables on page 65.

❷ Mates with 1794 Flex D-shell style base: 1794-TB37DS

❸ Mates with 1794 Flex D-shell style base: 1794-TB62DS

Digital Cable Specifications, Continued

Pinouts

Digital Pre-Wired Cables

The following diagrams illustrate how the individual conductors in the digital pre-wired cables are terminated at both ends. The description listed first is the wire color of the conductor connected to the PLC or PowerFlex drive removable terminal block (Bulletin 1746, 1756, 1762, 1764, 1769, 700S and 700H I/O) wiring arm (1771 I/O) or D-shell connector (Cat. No. 1794-TB37DS or 1794-62DS). The number that follows in parentheses is the corresponding pin number of the IFM/XIM mating connector.

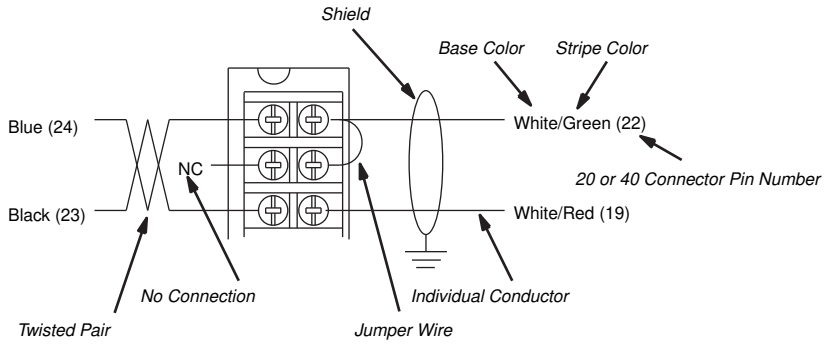

I/O Pin Connector Definition

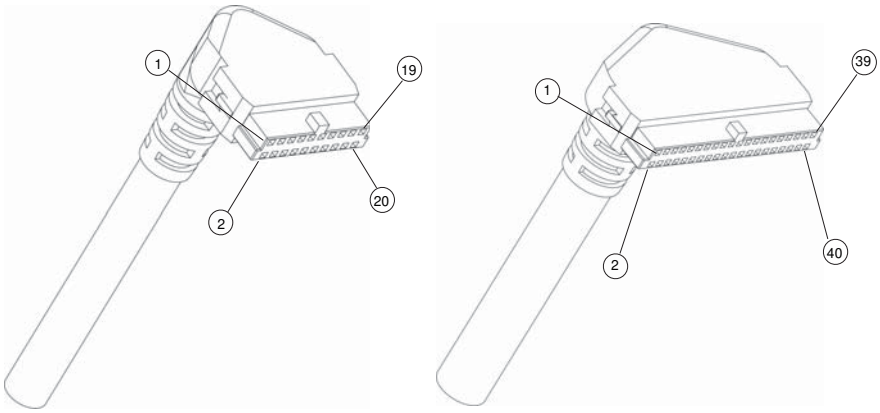

20-Conductor Cable 40-Conductor Cable

IFM Mating Connector Definition

Digital Cable Specifications, Continued

Pinouts, Continued

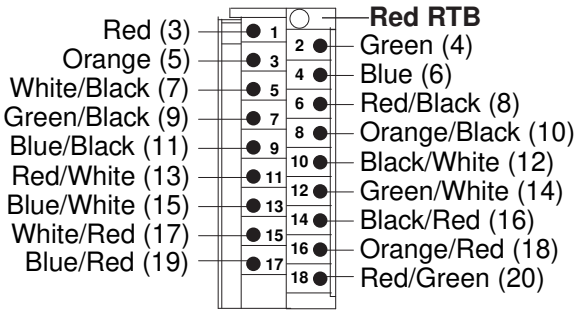

1492-CABLE❶A

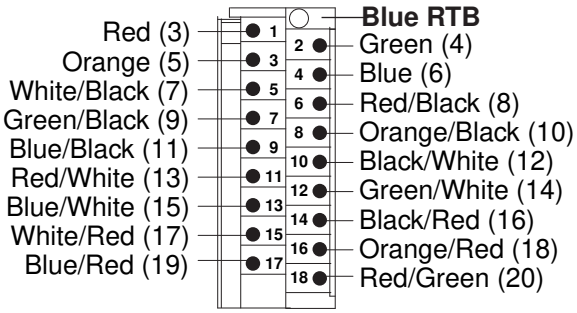

1492-CABLE❶B

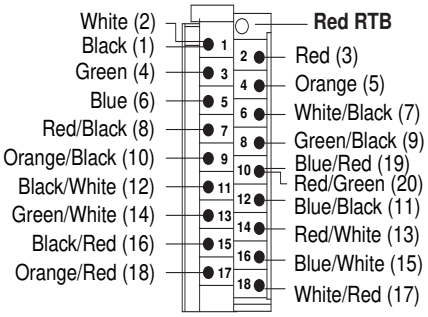

1492-CABLE❶C

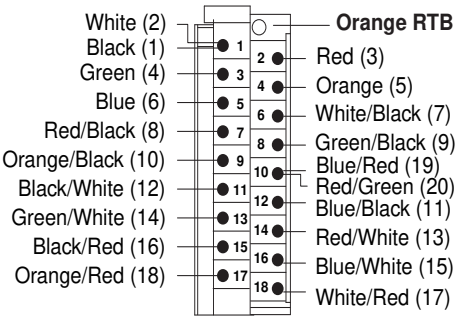

1492-CABLE❶D

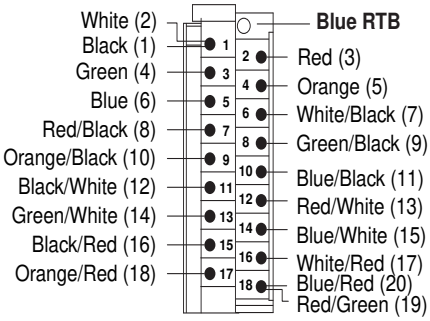

1492-CABLE❶E

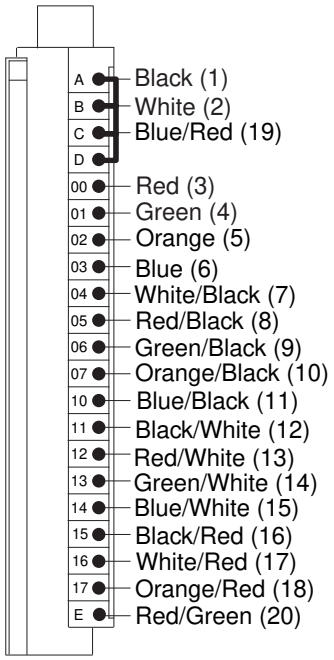

1492-CABLE❶F

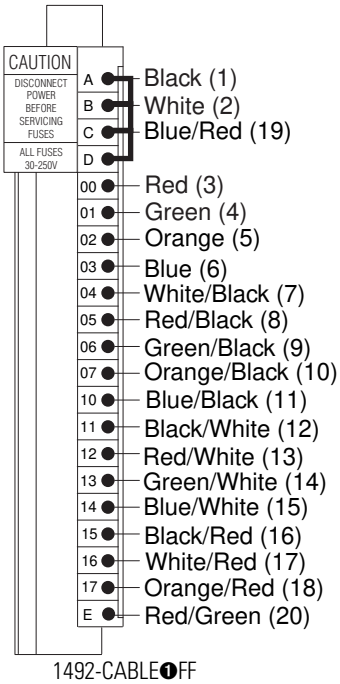

1492-CABLE❶FF

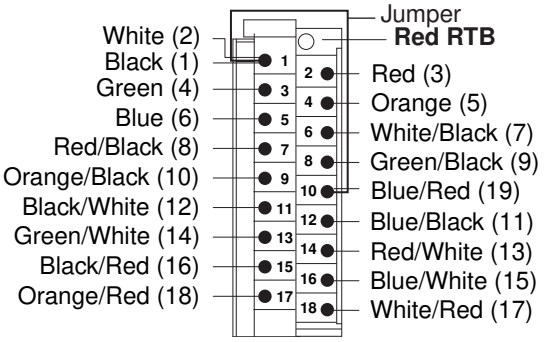

1492-CABLE❶G

❶ Refer to footnote on page 149.

Digital Cable Specifications, Continued

Pinouts, Continued

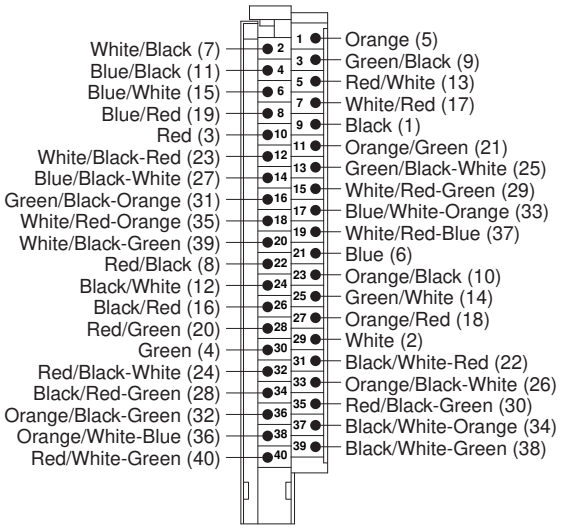

1492-CABLE❶J

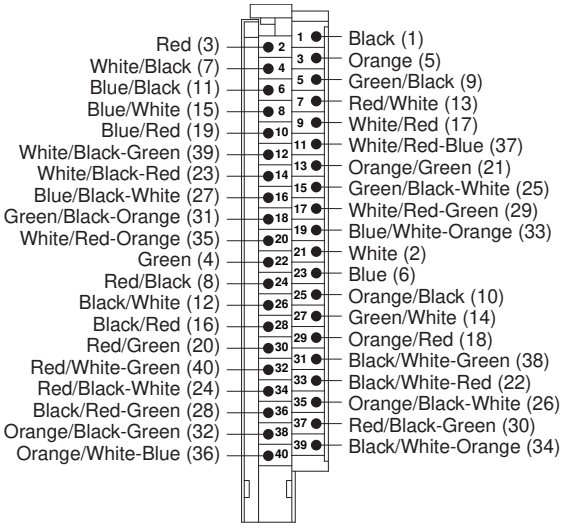

1492-CABLE❶K

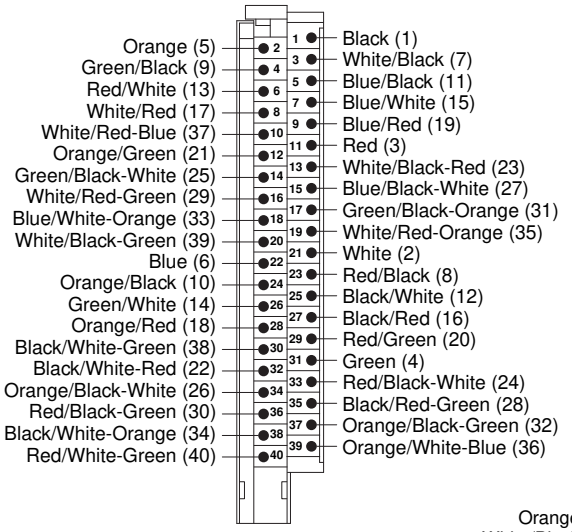

1492-CABLE❶L

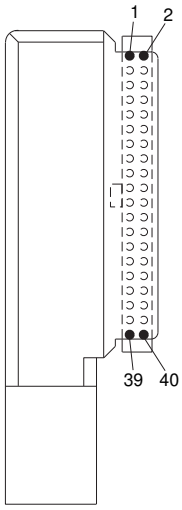

1492-CABLE❶H

❷

Black (1)
White (2)
Red (3)
Green (4)
Orange (5)
Blue (6)
White/Black (7)
Red/Black (8)
Green/Black (9)
Orange/Black (10)
Blue/Black (11)
Black/White (12)
Red/White (13)
Green/White (14)
Blue/White (15)
Black/Red (16)
White/Red (17)
Orange/Red (18)
Blue/Red (19)
Red/Green (20)
Orange/Green (21)
Black/White-Red (22)
White/Black-Red (23)
Red/Black-White (24)
Green/Black-White (25)
Orange/Black-White (26)
Blue/Black-White (27)
Black/Red-Green (28)
White/Red-Green (29)
Red/Black-Green (30)
Green/Black-Orange (31)
Orange/Black-Green (32)
Blue/White-Orange (33)
Black/White-Orange (34)
White/Red-Orange (35)
Orange/White-Blue (36)
White/Red-Blue (37)
Black/White-Green (38)
White/Black-Green (39)
Red/White-Green (40)

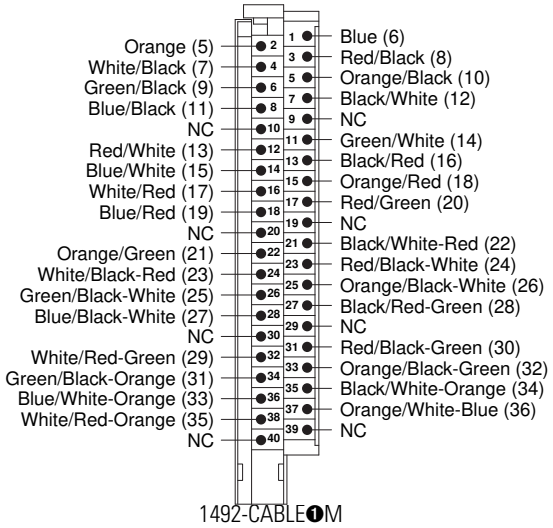

1492-CABLE❶M

❶ Refer to footnote on page 149.

❷ Connector Pin reference. For the IFM end reference, refer to the table on page 151 and match the wire color to the IFM Pin reference number.

Digital Cable Specifications, Continued

Pinouts, Continued

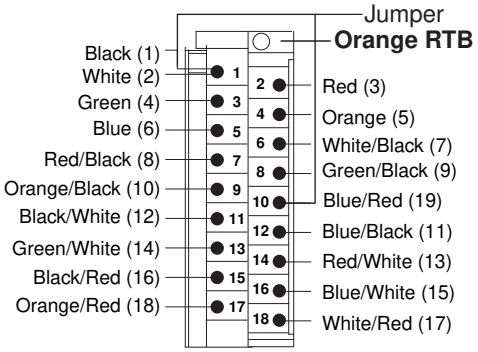

1492-CABLE❶N

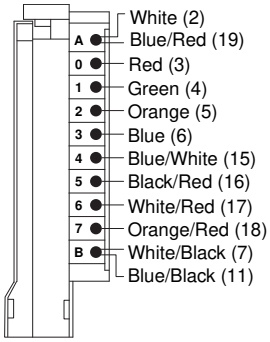

1492-CABLE❶T

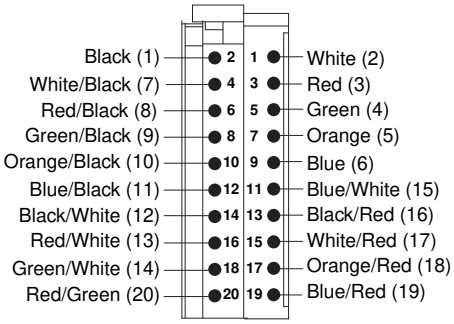

1492-CABLE❶U

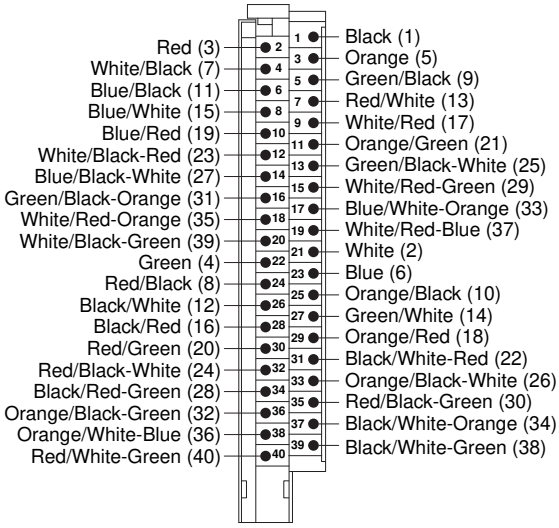

1492-CABLE❶R

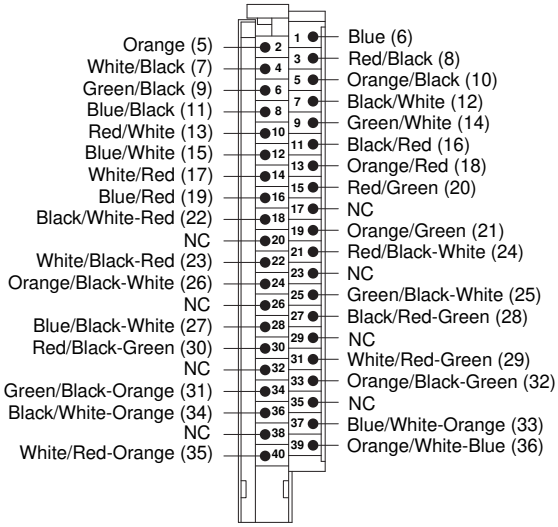

1492-CAB❶R71

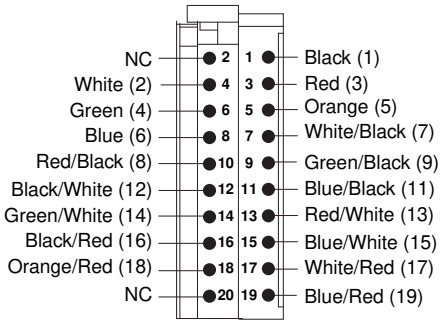

1492-CABLE❶V

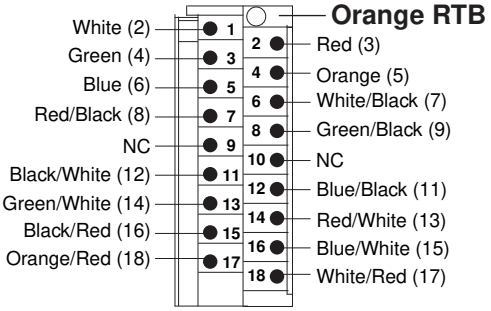

1492-CABLE❶S

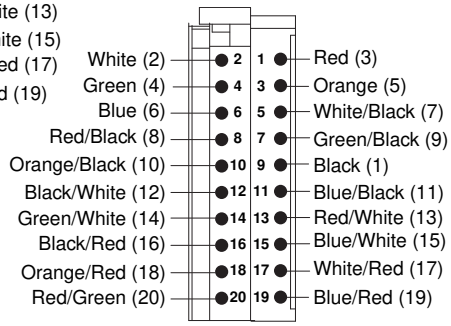

1492-CABLE❶W

❶ Refer to footnote on page 149.

Digital Cable Specifications, Continued

Pinouts, Continued

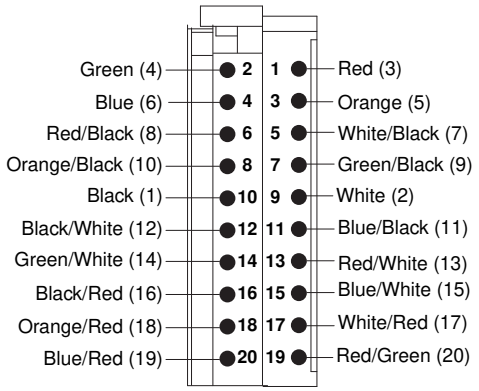

1492-CABLE❶X

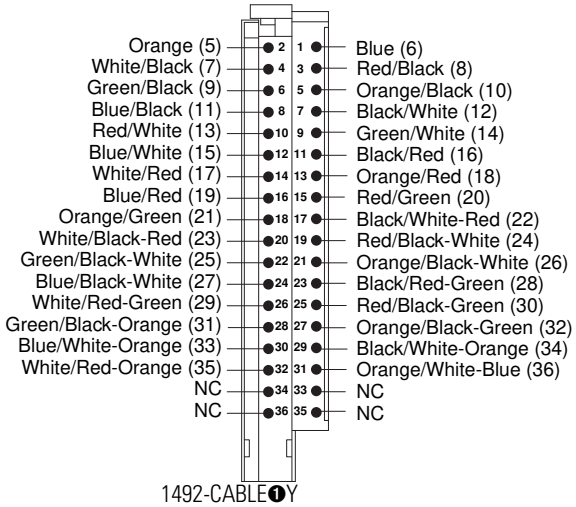

1492-CABLE❶Y

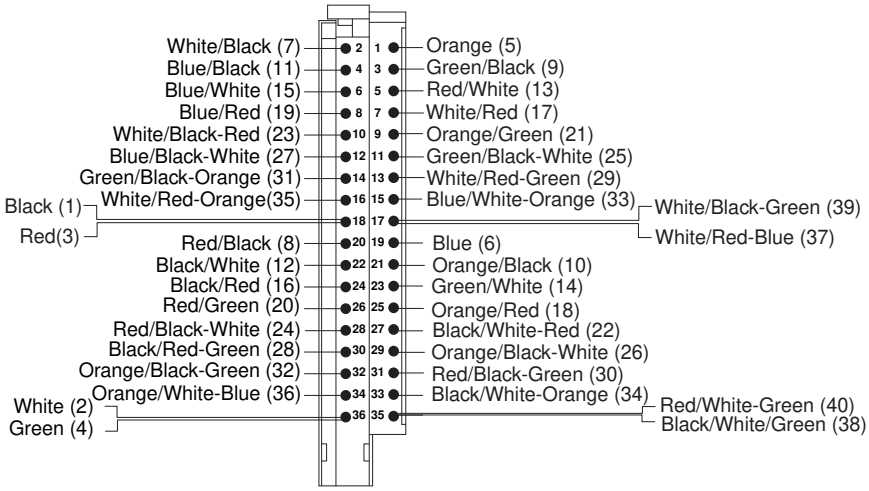

1492-CABLE❶Z

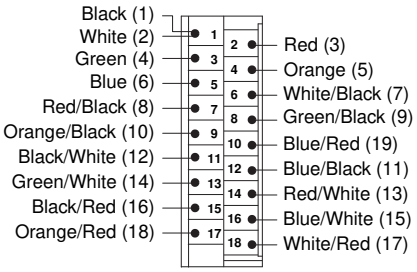

1492-CABLE❶CR
(Red RTB)

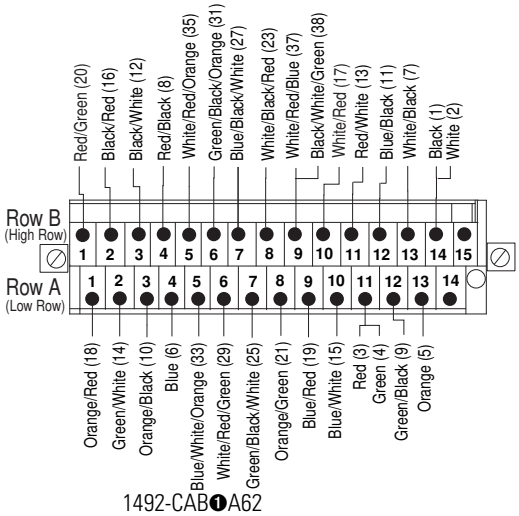

1492-CAB❶A62

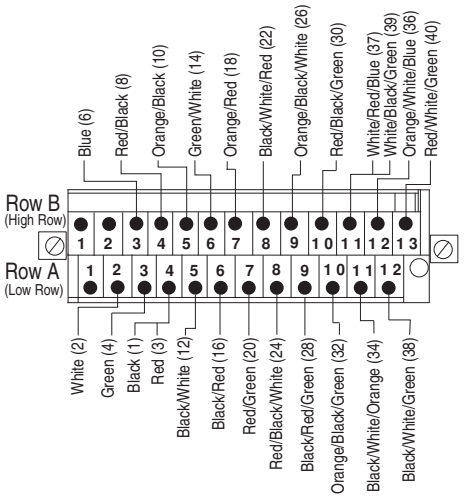

1492-CAB❶B62

❶ Refer to footnote on page 149.

Digital Cable Specifications, Continued

Pinouts, Continued

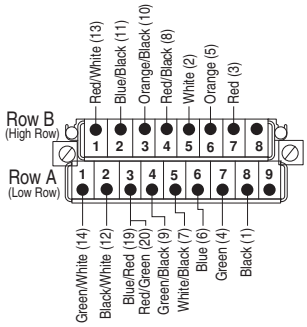

1492-CAB❶A64

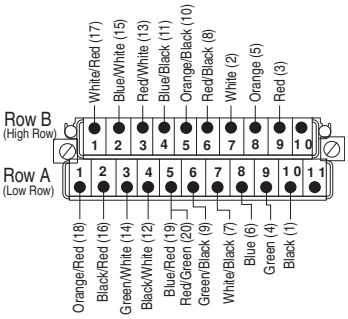

1492-CAB❶B64

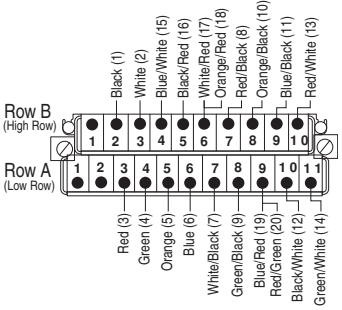

1492-CAB❶C64

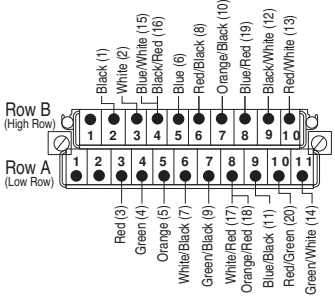

1492-CAB❶F64

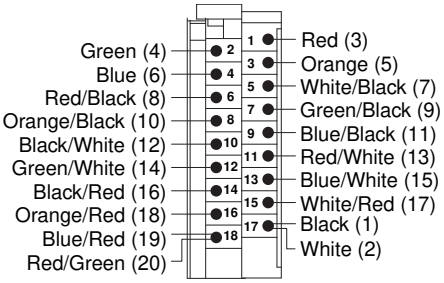

1492-CAB❶A69

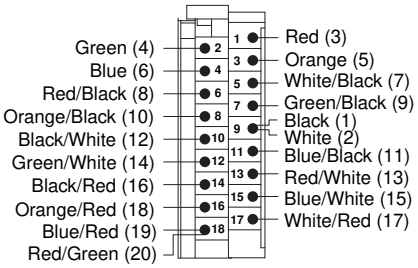

1492-CAB❶B69

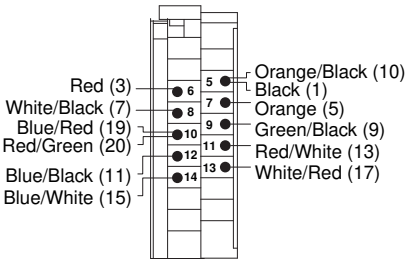

1492-CAB❶C69

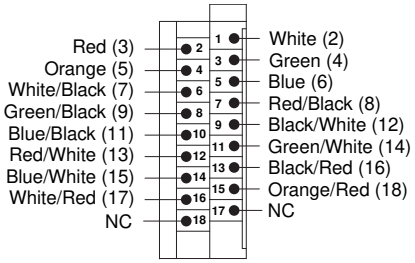

1492-CAB❶D69

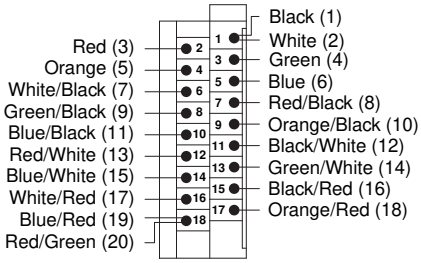

1492-CAB❶E69

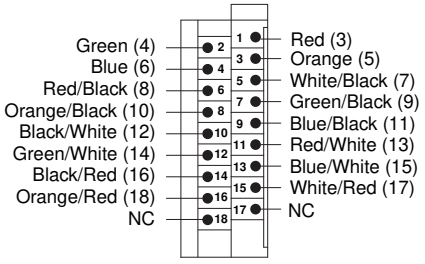

1492-CAB❶F69

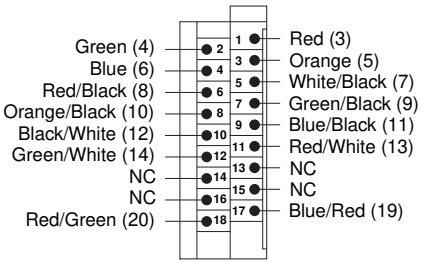

1492-CAB❶G69

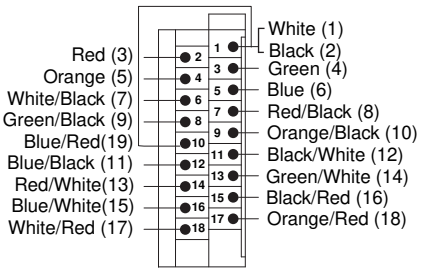

1492-CAB❶H69

❶ Refer to footnote on page 149.

Digital Cable Specifications, Continued

Pinouts, Continued

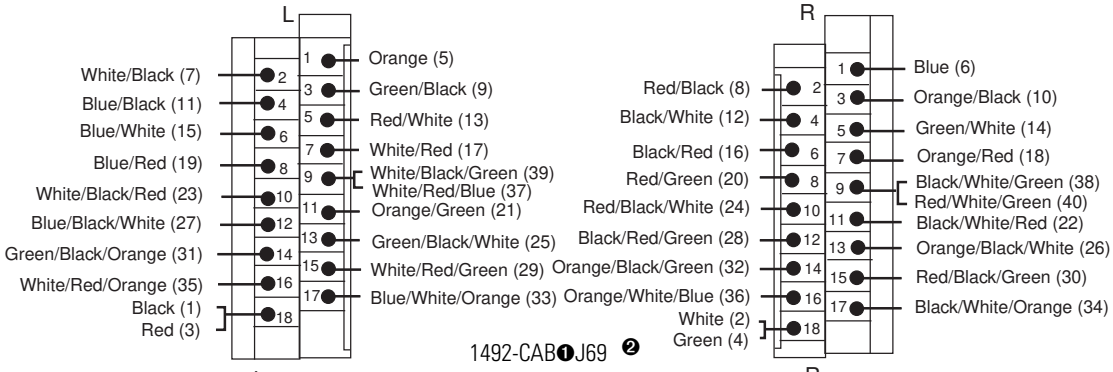

1492-CAB❶J69 ❷

1492-CAB❶K69 ❷

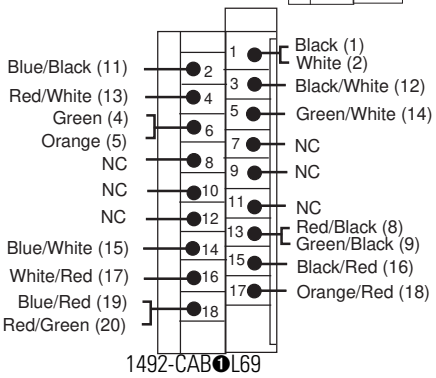

1492-CAB❶L69

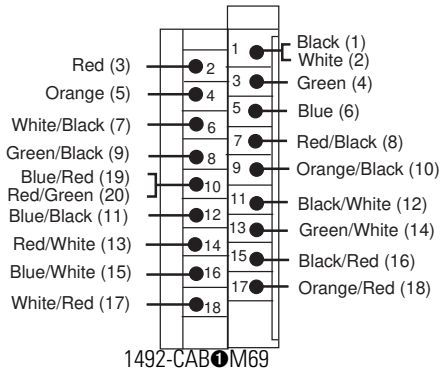

1492-CAB❶M69

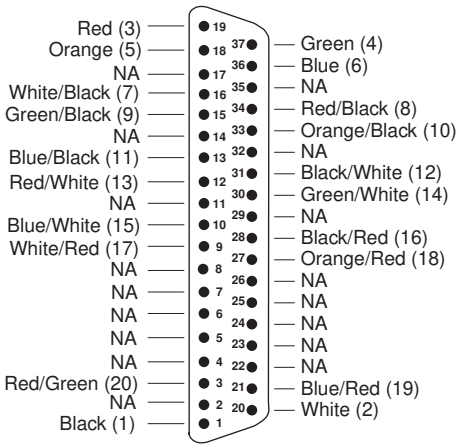

Flex D-shell End

1492-CAB❶A94

❶ Refer to footnote on page 149.

❷ 1492-CAB❶K69 and 1492-CAB❶J69 are made up of two (2) individual 18-pin terminal blocks connected to a single cable assembly.

Digital Cable Specifications, Continued

Pinouts, Continued

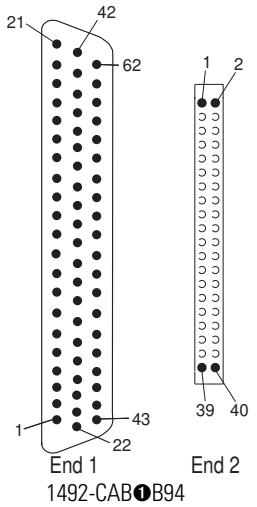

Cable Wiring Table Conductor for 1492-CAB❶B94

Connector 62 Pin D–Shell Reference, End 1	Conductor Color Code	Connectors 40-Pin Reference, End 2	Connector 62 Pin D–Shell Reference, End 1	Conductor Color Code	Connectors 40-Pin Reference, End 2
15	Black	1	39	Orange/Green	21
23	White	2	28	Black/White/Red	22
16	Red	3	40	White/Black/Red	23
24	Green	4	29	Red/Black/White	24
17	Orange	5	41	Green/Black/White	25
4	Blue	6	45	Orange/Black/White	26
18	White/Black	7	42	Blue/Black/White	27
5	Red/Black	8	46	Black/Red/Green	28
19	Green/Black	9	59	White/Red/Green	29
6	Orange/Black	10	47	Red/Black/Green	30
20	Blue/Black	11	60	Green/Black/Orange	31
7	Black/White	12	48	Orange/Black/Green	32
21	Red/White	13	61	Blue/White/Orange	33
8	Green/White	14	49	Black/White/Orange	34
36	Blue/White	15	62	White/Red/Orange	35
25	Black/Red	16	50	Orange/White/Blue	36
37	White/Red	17	57	White/Red/Blue	37
26	Orange/Red	18	1	Black/White/Green	38
38	Blue/Red	19	58	White/Black/Green	39
27	Red/Green	20	2	Red/White/Green	40

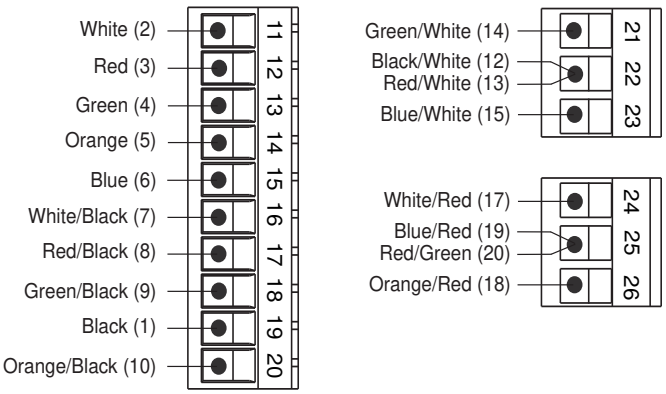

1492-CAB①A7H

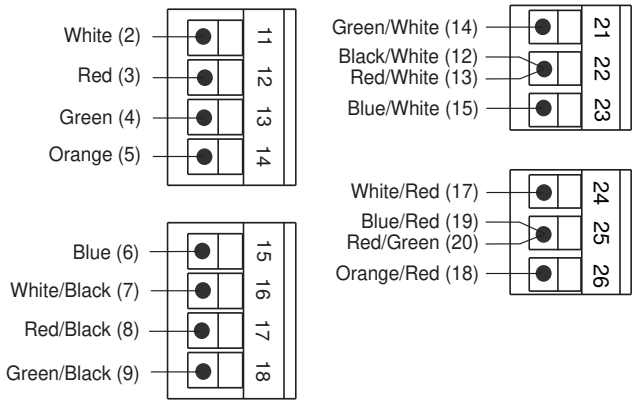

1492-CAB①B7H

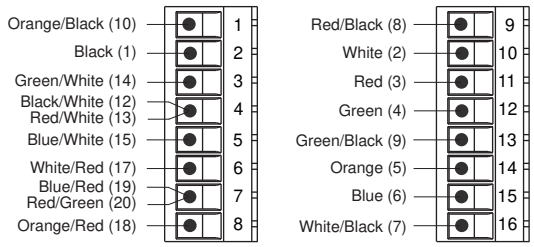

1492-CAB①A7S

❶ Refer to footnote on page 149.

Digital Cable Specifications, Continued

I/O Module-Ready Cables

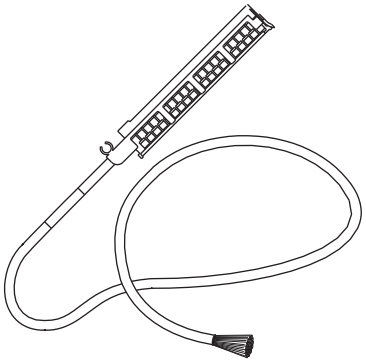

The I/O module-ready cables have a pre-wired wiring arm or removable terminal block on one end to connect the programmable controller I/O module and 12…40 individually colored #18 or #22 AWG conductors on the other. These cables provide the convenience of a pre-wired I/O module connector, while still allowing the flexibility to wire to standard terminal blocks.

Pre-wired I/O module connectors include:

- Catalog Number 1746-N3 40-point plug-in connector (Catalog Number CABLE❶N3)
- Bulletin 1746 16-point removable terminal blocks in Red, Blue, and Orange (Catalog Number CABLE❶RTBR, ❶RTBB, ❶RTBO)
- Catalog Number 1756-TBCH 36-point removable terminal block (Catalog Number CABLE❶TBCH)
- Catalog Number 1756-TBNH 20-point removable terminal block (Catalog Number CABLE❶TBNH)
- Catalog Number 1769-RTBN10 8-point removable terminal block (Catalog Number CABLE❶RTN10)
- Catalog Number 1769-RTBN18 20-point removable terminal block (Catalog Number CABLE❶RTN18)
- Catalog Number 1769-RTBN32I and 1769-RTBN320 for 32-point 1769 I/O modules
- Catalog Number 1771-WH 16-point wiring arm (Catalog Number CABLE❶WH)
- Catalog Number 1771-WN 32-point wiring arm (Catalog Number CABLE❶WN)
- Catalog Number 1771-WHF 16-point fused wiring arm (with fuses) (Catalog Number CABLE❶WHF)
- Catalog Number 1771-WD 6-point wiring arm (Catalog Number CABLE❶WD)
- Catalog Number 1771-WA 8-point wiring arm (Catalog Number CABLE❶WA)

❶ Cables are available in lengths of 1.0 m, 2.5 m, and 5.0 m. To order, insert the code for the desired cable length into the catalog number (010 = 1.0 m, 025 = 2.5 m, and 050 = 5.0 m). Example: **Catalog Number 1492-CABLE025WH** is for a 2.5 m cable with a pre-wired 1771-WH Wiring Arm on one end. Also refer to Build-to-Order Length Cables on page 65.

Digital Cable Specifications, Continued

I/O Module-Ready Cables, Continued

I/O Module-Ready Cable Specifications

Catalog Number	Cable Lengths	Insulation Rating	Number of Conductors	Conductor Size	Nominal Outer Diameter	I/O Module Connector
1492-CABLE❶N3	1.0, 2.5, 5.0 m	300V 80°C	40	#22 AWG	11.2 mm (0.44 in.)	1746-N3 (40-Point) Plug-in Connector
1492-CABLE❶RTBB	1.0, 2.5, 5.0 m	300V 80°C	20	#18 AWG	11.4 mm (0.45 in.)	1746-RT25B Blue Removable Terminal Block
1492-CABLE❶RTBO	1.0, 2.5, 5.0 m	300V 80°C	20	#18 AWG	11.4 mm (0.45 in.)	1746-RT25C Orange Removable Terminal Block
1492-CABLE❶RTBR	1.0, 2.5, 5.0 m	300V 80°C	20	#18 AWG	11.4 mm (0.45 in.)	1746-RT25R Red Removable Terminal Block
1492-CABLE❶TBCH	1.0, 2.5, 5.0 m	300V 80°C	40	#18 AWG	14.1 mm (0.55 in.)	1756-TBCH (36-Point) Removable Terminal Block
1492-CABLE❶TBNH	1.0, 2.5, 5.0 m	300V 80°C	20	#18 AWG	11.4 mm (0.45 in.)	1756-TBNH (20-Point) Removable Terminal Block
1492-CAB❶T62	1.0, 2.5, 5.0 m	300V 80°C	25	#18 AWG	13.2 mm (0.52 in.)	1762-L40xxx Output Connector
1492-CAB❶X62	1.0, 2.5, 5.0 m	300V 80°C	40	#22 AWG	11.7 mm (0.46 in.)	1762-L40xxx Input Connector
1492-CAB❶T64	1.0, 2.5, 5.0 m	300V 80°C	20	#18 AWG	11.4 mm (0.45 in.)	1764-24AWA, -24BWA Output Terminal
1492-CAB❶U64	1.0, 2.5, 5.0 m	300V 80°C	20	#18 AWG	11.4 mm (0.45 in.)	1764-28BXB Output Terminal
1492-CAB❶W64	1.0, 2.5, 5.0 m	300V 80°C	20	#22 AWG	9.0 mm (0.36 in.)	1764-24AWA, -BWA Input Terminal
1492-CAB❶X64	1.0, 2.5, 5.0 m	300V 80°C	20	#22 AWG	9.0 mm (0.36 in.)	1764-28BXBH Input Terminal
1492-CAB❶RTN10	1.0, 2.5, 5.0 m	300V 80°C	12	#18 AWG	9.0 mm (0.36 in.)	1769-RTBN10 Removable Terminal Block
1492-CAB❶RTN18	1.0, 2.5, 5.0 m	300V 80°C	20	#18 AWG	11.4 mm (0.45 in.)	1769-RTBN18 (20-Point) Removable Terminal Block
1492-CAB❶RTN32I	1.0, 2.5, 5.0 m	300V 80°C	40	#22 AWG	11.7 mm (0.46 in.)	(2) 1769-RTBN18 (20-Point) Removable Terminal Block
1492-CAB❶RTN32O	1.0, 2.5, 5.0 m	300V 80°C	40	#22 AWG	11.7 mm (0.46 in.)	(2) 1769-RTBN18 (20-Point) Removable Terminal Block
1492-CAB❶G94	1.0, 2.5, 5.0 m	300V 80°C	20	#22 AWG	9.0 mm (0.36 in.)	37-pin male D-shell❷
1492-CAB❶H94	1.0, 2.5, 5.0 m	300V 80°C	40	#22 AWG	11.7 mm (0.46 in.)	62-pin male D-shell❸
1492-CABLE❶WA	1.0, 2.5, 5.0 m	300V 80°C	12	#18 AWG	9.0 mm (0.36 in.)	1771-WA (8-Point/10 Terminal) Wiring Arm
1492-CABLE❶WD	1.0, 2.5, 5.0 m	300V 80°C	12	#18 AWG	9.0 mm (0.36 in.)	1771-WD (6-Point/12 Terminal) Wiring Arm
1492-CABLE❶WH	1.0, 2.5, 5.0 m	300V 80°C	20	#18 AWG	11.4 mm (0.45 in.)	1771-WH (16-Point/21 Terminal) Wiring Arm
1492-CABLE❶WHF	1.0, 2.5, 5.0 m	300V 80°C	20	#18 AWG	11.4 mm (0.45 in.)	1771-WHF (16-Point/21 Terminal) Fused Wiring Arm
1492-CABLE❶WN	1.0, 2.5, 5.0 m	300V 80°C	40	#18 AWG	14.1 mm (0.55 in.)	1771-WN (32-Point/40 Terminal) Wiring Arm

❶ Cables are available in lengths of 1.0 m, 2.5 m, and 5.0 m. To order, insert the code for the desired cable length into the catalog number (010 = 1.0 m, 025 = 2.5 m, and 050 = 5.0 m). Example: **Catalog Number 1492-CABLE025WH** is for a 2.5 m cable with a pre-wired 1771-WH Wiring Arm on one end. Also refer to Build-to-Order Length Cables on page 65.

❷ Mates with Bul. 1794 Flex D-shell style base: Cat. No. 1794-TB37DS.

❸ Mates with Bul. 1794 Flex D-shell style base: Cat. No. 1794-TB62DS.

Digital Cable Specifications, Continued

I/O Module-Ready Cables, Continued

Wire Colors for I/O Module-Ready Cables and IFM Pint Reference Number for I/O Ready Pre-Wired Cables

IFM Pin Reference Number	Wire Color Base/Stripe/Stripe	IFM Pin Reference Number	Wire Color Base/Stripe/Stripe
1	Black	21	Orange/Green
2	White	22	Black/White/Red
3	Red	23	White/Black/Red
4	Green	24	Red/Black/White
5	Orange	25	Green/Black/White
6	Blue	26	Orange/Black/White
7	White/Black	27	Blue/Black/White
8	Red/Black	28	Black/Red/Green
9	Green/Black	29	White/Red/Green
10	Orange/Black	30	Red/Black/Green
11	Blue/Black	31	Green/Black/Orange
12	Black/White	32	Orange/Black/Green
13	Red/White	33	Blue/White/Orange
14	Green/White	34	Black/White/Orange
15	Blue/White	35	White/Red/Orange
16	Black/Red	36	Orange/White/Blue
17	White/Red	37	White/Red/Blue
18	Orange/Red	38	Black/White/Green
19	Blue/Red	39	White/Black/Green
20	Red/Green	40	Red/White/Green

❶ Cables are available in lengths of 1.0 m, 2.5 m, and 5.0 m. To order, insert the code for the desired cable length into the catalog number (010 = 1.0 m, 025 = 2.5 m, and 050 = 5.0 m). Example: **Catalog Number 1492-CABLE025WH** is for a 2.5 m cable with a pre-wired 1771-WH Wiring Arm on one end. Also refer to Build-to-Order Length Cables on page 65.

Digital Cable Specifications, Continued

I/O Module-Ready Cables, Continued

Below is the wire color table for I/O module-ready cables. Each conductor is given a reference number in the table on page 151. The reference number is used in the illustrations that follow to indicate the corresponding screw terminal.

1492-CABLE❶N3

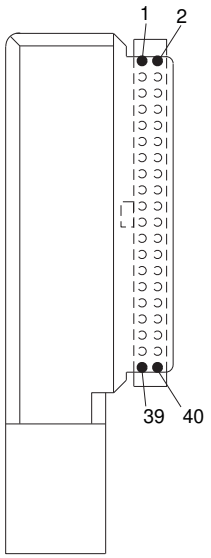

1492-CABLE❶TBCH

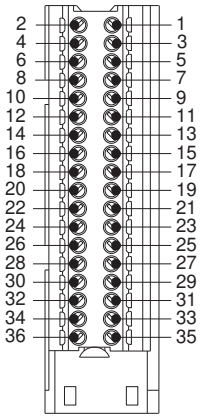

1492-CABLE❶TBNH

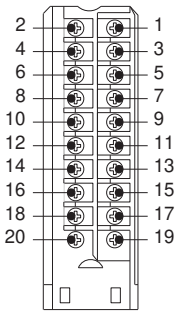

1492-CABLE❶WN

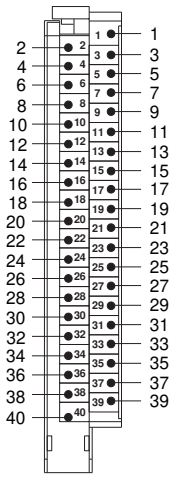

1492-CABLE❶WH

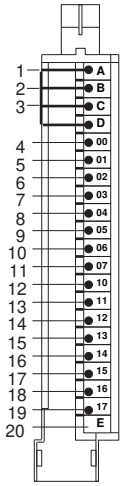

1492-CABLE❶WF

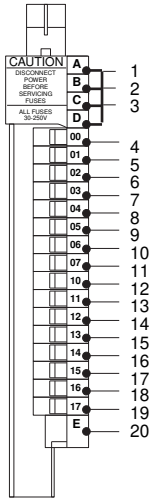

1492-CABLE❶WD

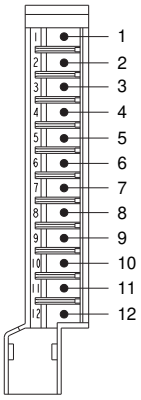

1492-CABLE❶WA

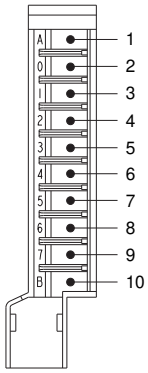

1492-CABLE❶RTBR
1492-CABLE❶RTBB
1492-CABLE❶RTBO

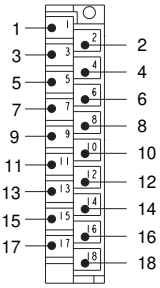

1492-CAB❶T62

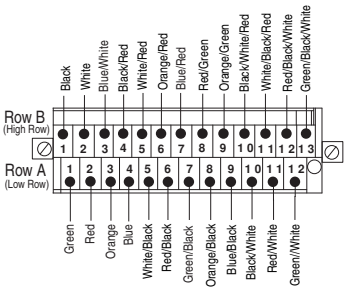

1492-CAB❶X62

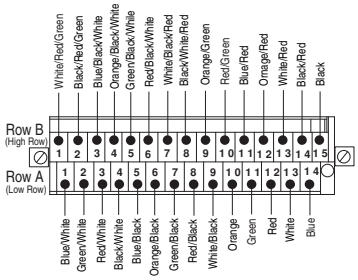

1492-CAB❶T64

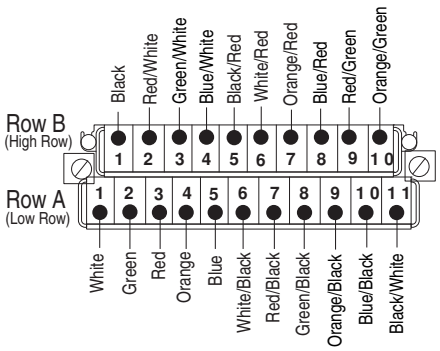

1492-CAB❶U64

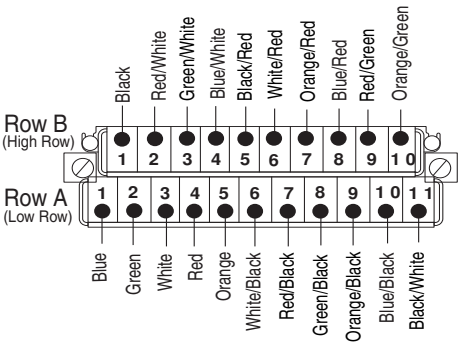

❶ Cables are available in lengths of 1.0 m, 2.5 m, and 5.0 m. To order, insert the code for the desired cable length into the catalog number (010 = 1.0 m, 025 = 2.5 m, and 050 = 5.0 m). Example: **Catalog Number 1492-CABLE025WH** is for a 2.5 m cable with a pre-wired 1771-WH Wiring Arm on one end. Also refer to Build-to-Order Length Cables on page 65.

❷ The 1492-CABRTN32F and -RTN320 are made up of two (2) individual 18-pin terminal blocks (L = Left, R=Right) connected to a single cable assembly.

Digital Cable Specifications, Continued

1492-CAB❶W64

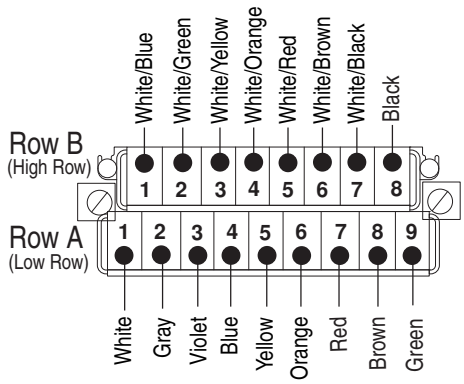

1492-CAB❶X64

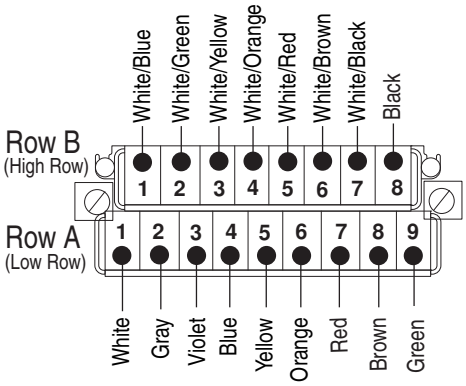

1492-CAB❶RTN10

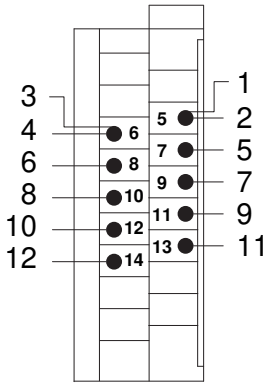

1492-CAB❶RTN18

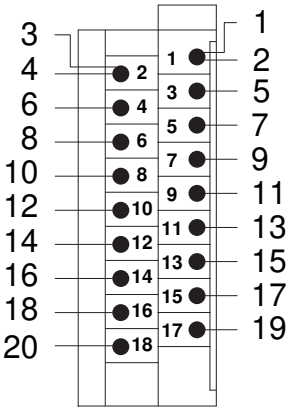

1492-CAB❶RTN32I

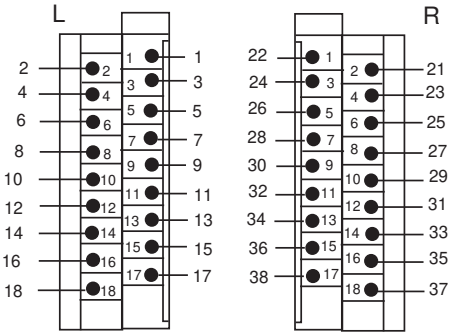

1492-CAB❶RTN320❷

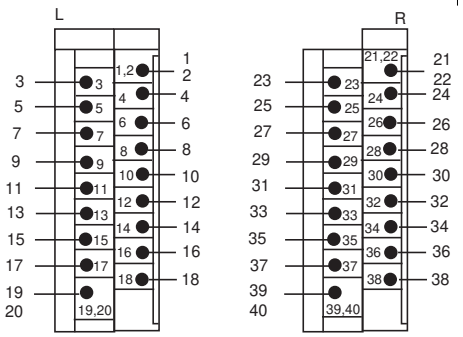

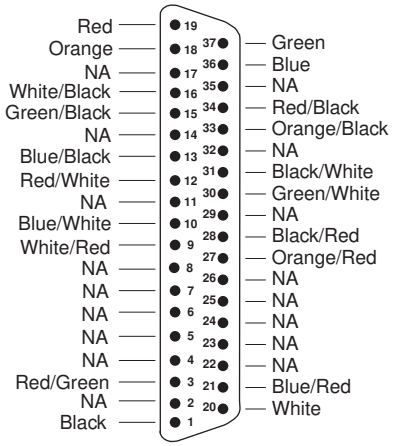

1492-CAB❶G94 ❸

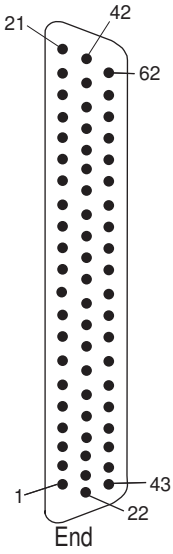

1492-CAB❶H94 ❸

Cable Wiring Table Conductor for 1492-CAB❶H94

62-Pin D-shell End	Conductor Color Code	62-Pin D-Shell End	Conductor Color Code
15	Black	39	Orange/Green
23	White	28	Black/White/Red
16	Red	40	White/Black/Red
24	Green	29	Red/Black/White
17	Orange	41	Green/Black/White
4	Blue	45	Orange/Black/White
18	White/Black	42	Blue/Black/White
5	Red/Black	46	Black/Red/Green
19	Green/Black	59	White/Red/Green
6	Orange/Black	47	Red/Black/Green
20	Blue/Black	60	Green/Black/Orange
7	Black/White	48	Orange/Black/Green
21	Red/White	61	Blue/White/Orange
8	Green/White	49	Black/White/Orange
36	Blue/White	62	White/Red/Orange
25	Black/Red	50	Orange/White/Blue
37	White/Red	57	White/Red/Blue
26	Orange/Red	1	Black/White/Green
38	Blue/Red	58	White/Black/Green
27	Red/Green	2	Red/White/Green

❶ Cables are available in lengths of 1.0 m, 2.5 m, and 5.0 m. To order, insert the code for the desired cable length into the catalog number (010 = 1.0 m, 025 = 2.5 m, and 050 = 5.0 m). Example: **Catalog Number 1492-CABLE025WH** is for a 2.5 m cable with a pre-wired 1771-WH Wiring Arm on one end. Also refer to Build-to-Order Length Cables on page 65.

❷ The 1492-CAB❶RTN32I and -RTN320 are made up of two (2) individual 18-pin terminal blocks (L = Left, R=Right) connected to a single cable assembly.

❸ Cable 1492-CAB❶G94 and -CAB❶H94 do not follow the cable wire color code chart on page151.

Digital Cable Specifications, Continued

IFM-Ready Cable Specifications

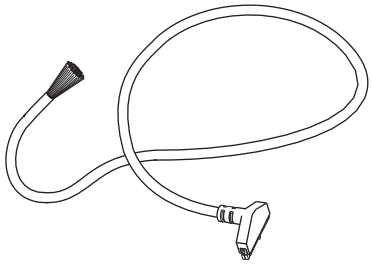

IFM-ready cables have a cable connector on one end to attach to the IFM and either 20 or 40 individually colored conductors on the other end (Catalog Numbers CABLE❶P and CABLE❶Q, respectively). These cables allow the IFM to be used in specialty applications that require a custom connection.

IFM-Ready Cable Specifications

Catalog Number	Cable Lengths	Insulation Rating	Number of Conductors	Conductor Size	Nominal Outer Diameter	Current/ Conductor	Compatible IFM Catalog Numbers
1492-CABLE❶P	1.0, 2.5, 5.0 m	300V 80°C	20	#22 AWG	9.0 mm (0.36 in.)	2 A	1492-IFM20_ _ _ 1492-XIM20_ _ _
1492-CABLE❶Q	1.0, 2.5, 5.0 m	300V 80°C	40	#22 AWG	11.7 mm (0.46 in.)	2 A	1492-IFM40_ _ _ 1492-XIM40_ _ _

Each colored conductor is connected to one pin of the molded cable connector as listed in the tables below.

1492-CABLE❶P

Connector Pin Number	Wire Color Base/Stripe/Stripe	Connector Pin Number	Wire Color Base/Stripe/Stripe
1	Black	11	Blue/Black
2	White	12	Black/White
3	Red	13	Red/White
4	Green	14	Green/White
5	Orange	15	Blue/White
6	Blue	16	Black/Red
7	White/Black	17	White/Red
8	Red/Black	18	Orange/Red
9	Green/Black	19	Blue/Red
10	Orange/Black	20	Red/Green

❶ Cables are available in lengths of 1.0 m, 2.5 m, and 5.0 m. To order, insert the desired cable length into the catalog number (010 = 1.0 m, 025 = 2.5 m, and 050 = 5.0 m). Example: **Catalog Number 1492-CABLE025P** is for a 2.5 m, 20 conductor IFM-ready cable. Also refer to Build-to-Order Length Cables on page 65.

Digital Cable Specifications, Continued

IFM-Ready Cable Specifications, Continued

1492-CABLE❶Q

Connector Pin Number	Wire Color Base/Stripe/Stripe	Connector Pin Number	Wire Color Base/Stripe/Stripe
1	Black	21	Orange/Green
2	White	22	Black/White/Red
3	Red	23	White/Black/Red
4	Green	24	Red/Black/White
5	Orange	25	Green/Black/White
6	Blue	26	Orange/Black/White
7	White/Black	27	Blue/Black/White
8	Red/Black	28	Black/Red/Green
9	Green/Black	29	White/Red/Green
10	Orange/Black	30	Red/Black/Green
11	Blue/Black	31	Green/Black/Orange
12	Black/White	32	Orange/Black/Green
13	Red/White	33	Blue/White/Orange
14	Green/White	34	Black/White/Orange
15	Blue/White	35	White/Red/Orange
16	Black/Red	36	Orange/White/Blue
17	White/Red	37	White/Red/Blue
18	Orange/Red	38	Black/White/Green
19	Blue/Red	39	White/Black/Green
20	Red/Green	40	Red/White/Green

❶ Cables are available in lengths of 1.0 m, 2.5 m, and 5.0 m. To order, insert the desired cable length into the catalog number (010 = 1.0 m, 025 = 2.5 m, and 050 = 5.0 m). Example: **Catalog Number 1492-CABLE025P** is for a 2.5 m, 20 conductor IFM-ready cable. Also refer to Build-to-Order Length Cables on page 65.

Analog IFM Specifications (1492-AIFM-xx and 1492-RAIFM-xx))

AIFM Catalog Number	Page No. for Application Notes, and Pinout	Page No. for Specifications	AIFM Catalog Number	Page No. for Application Notes, and Pinout	Page No. for Specifications	AIFM Catalog Number	Page No. for Application Notes, and Pinout	Page No. for Specifications
1492-AIFM8-3, -RAIFM8-3	158	188	1492-AIFM4C-F-5	160	188	1492-AIFM16-F-5	164	188
1492-AIFM4-3, -RAIFM4-3	157	188	1492-AIFM4I-F-5	161	188	1492-AIFMPI	166	188
1492-AIFM6S-3, -RAIFM6S-3	158	188	1492-AIFM8-F-5	162	188	1492-AIFMQS	165	188
1492-AIFM6TC-3	159	188	1492-AIFM16-F-3	163	188	—	—	—

For all AIFM dimensions, refer to page 187.

For general Adhesive Label Card information, refer to page 181.

For Field-Side Wiring Diagrams, refer to the Wiring System web page at **http://www.ab.com/raise**. Refer to page 186 for specific platform web site information. Refer to the online documentation for new product information.

Symbols and Terminal Identification Conventions Used Throughout the Pinout Section

1492-AIFM Field-Side Terminal ❶

1492 Pre-Wired Cable

I/O Module Connection

Fuse and Blown Fuse Indicator

One-Pole DIP Switch

Two-Pole DIP Switch

1492-AIFM and Cable Connection (D-Shell Pin)

Test Point

❶ Field-Side Terminal Identification Convention:

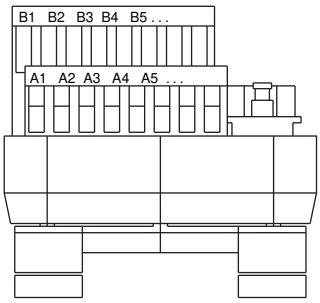

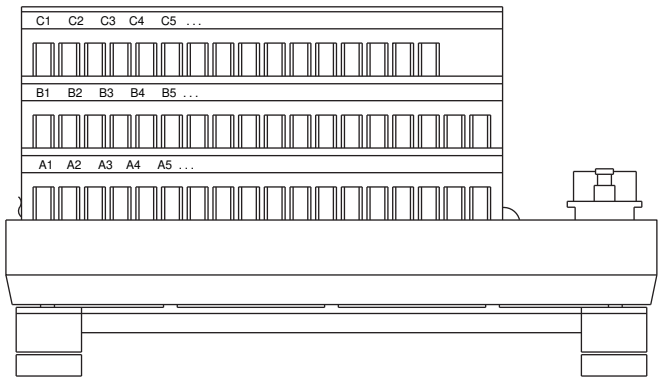

1492-AIFM4-3
1492-RAIFM4-3

Feed-Through 4-channel Input, Output or 2-in/2-out Combination with 3 Terminals/Channel

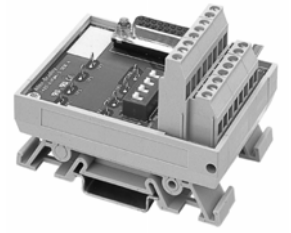

Application Notes

1. **Compatibility —** To ensure proper operation with the I/O module, do **not** exceed the voltage and current ratings of the AIFM.
2. **Wiring —** Refer to the Label Section on page 181. For Field-Side Wiring Diagrams, refer to the Wiring System web site information on page 186.
3. **DIP Switches —** Selectable resistors are available to current limit the Catalog Numbers 1771-OFE2 and -OFE3 output circuits. By opening the switch (off or down position), 250 Ω series impedance is inserted into the output circuit. Default switch position is on/closed/no series impedance. Do not exceed maximum loop impedance of output module (1200 Ω for -OFE2; 450 Ω for -OFE3).
4. **Test Points —** With optional 250 Ω series impedance in output circuit (refer to DIP Switches), test points can be used to measure loop voltage/current. Refer to the Pinout for test point circuit location.
5. **Shield Terminals —** Four field-side terminals are jumpered together on the AIFM and internally connected to the D-shell housing.
6. **Dimensions —** Refer to page 188.

Pinout

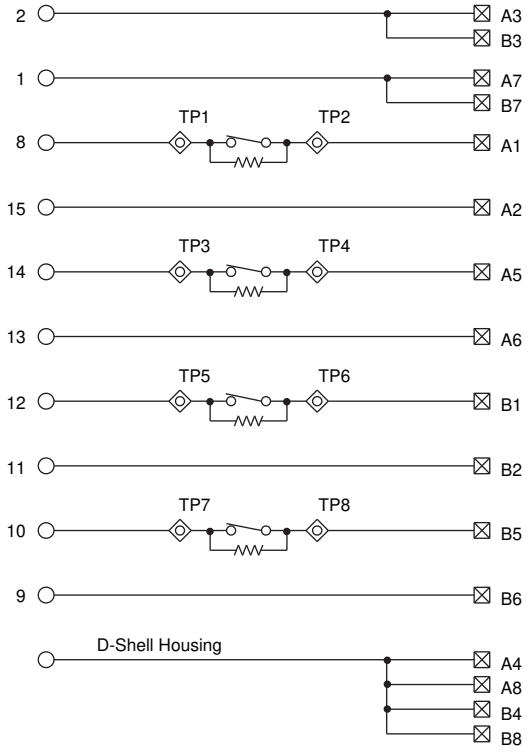

1492-AIFM6S-3

1492-RAIFM6S-3

Feed-Through 6-Channel Isolated with 3...4 Terminals/Channel

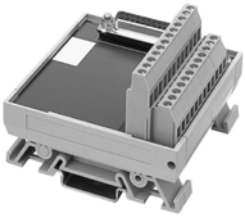

Application Notes

1. **Compatibility —** To ensure proper operation with the I/O module, do **not** exceed the voltage and current ratings of the AIFM.
2. **Wiring —** Refer to the Label Section on page 181. For Field-Side Wiring Diagrams, refer to the Wiring System web site information on page 186.
3. **Shield Terminals —** Six field-side terminals are jumpered together on the AIFM and internally connected to the D-shell housing.
4. **Dimensions —** Refer to page 187.

Pinout

1492-AIFM8-3

1492-RAIFM8-3

Feed-Through 8-Channel Differential 16-Channel Single-Ended with 3 Terminals/Channel

Application Notes

1. **Compatibility —** To ensure proper operation with the I/O module, do **not** exceed the voltage and current ratings of the AIFM.
2. **Wiring —** Refer to the Label Section on page 181. For Field-Side Wiring Diagrams, refer to the Wiring System web site information on page 186.
3. **Extra Terminals —** Eight field-side terminals are jumpered together on the AIFM. For some I/O modules, the terminals are also internally connected to module common through the pre-wired cable. Refer to the AIFM and ACABLE pinouts.
4. **Shield Terminals —** Eight field-side terminals are jumpered together on the AIFM and internally connected to the D-shell housing.
5. **Dimensions —** Refer to page 187.

Pinout

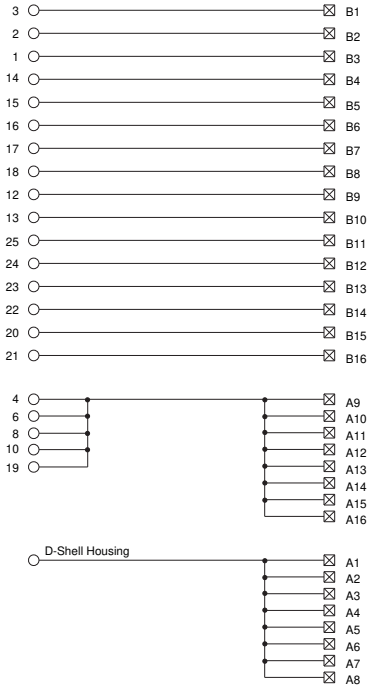

1492-AIFM6TC-3

Thermocouple 6-Channel with 3 Terminals/Channel

Application Notes

1. **Compatibility —** To ensure proper operation with the I/O module, do **not** exceed the voltage and current ratings of the AIFM.
2. **Wiring —** Refer to the Label Section on page 181. For Field-Side Wiring Diagrams, refer to the Wiring System web site information on page 186.
3. **Shield Terminals —** Six field-side terminals are jumpered together on the AIFM and internally connected to the D-shell housing.
4. **Cold Junction Compensation —** This AIFM contains on-board cold junction compensation (CTC) through a thermistor (T) and isothermal bar mounted to the field-side terminals. Do **not** install the cold junction sensor (provided with the Catalog Number 1756-IT6I or 1756-IT6I2 thermocouple input module) on the removable terminal block of the pre-wired cable. This module is NOT compatible with other PLC systems (e.g. bulletin numbers 1746, 1771, etc.) that do not have external CJC capability.
5. **Dimensions —** Refer to page 187.

Pinout

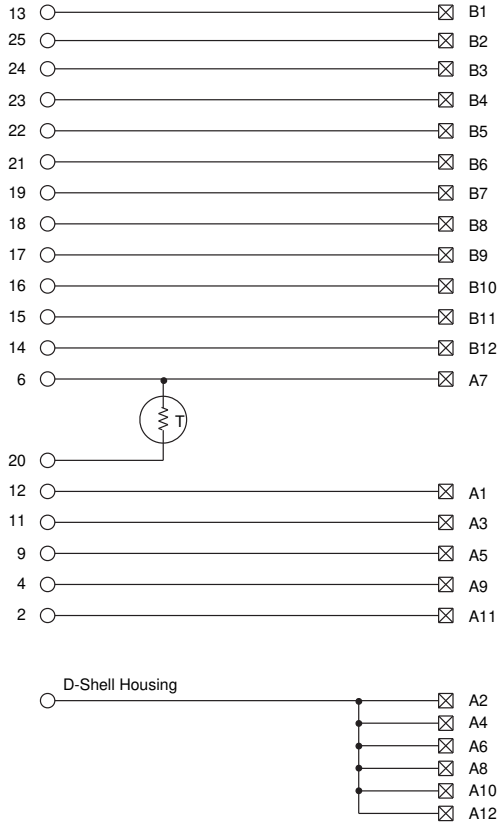

1492-AIFM4C-F-5

Fusible 2-channel Input, 2-Channel Output with 24V DC Blown Fuse Indicators, Test Points, 5 Terminals/Input, 3 Terminals/Output

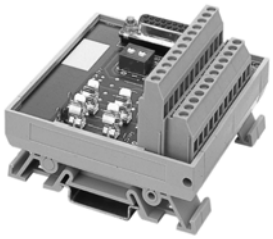

Application Notes

1. **Compatibility —** To ensure proper operation with the I/O module, do **not** exceed the voltage and current ratings of the AIFM.
2. **Wiring —** Refer to the Label Section on page 181. For Field-Side Wiring Diagrams, refer to the Wiring System web site information on page 186.
3. **Fusing —** Fuse holders are included with the AIFM. Fuses (5 x 20 mm) are not included. Do not exceed 2 A per input, 12 A per AIFM.
4. **Isolation —** The fuse clips and blown fuse indicators are internally connected to one power source field-side terminal. All inputs must reference the same power source.
5. **DIP Switches —** For ease of wiring, unused inputs can be jumpered to module common by closing the DIP switches (ON position) for analog modules that have this capability. Default switch position is OPEN/OFF/NOT jumpered together.
6. **Test Points —** When using a two-wire transmitter, test points (TP1-TP2) can be used to measure input loop current. Refer to the Pinout for test point circuit location.
7. **Extra Terminals —** Four field-side terminals are internally jumpered on the AIFM. They can be used for power source common connections.
8. **Shield Terminals —** Four field-side terminals are jumpered together on AIFM and internally connected to the D-shell housing.
9. **Dimensions —** Refer to page 187.

Pinout

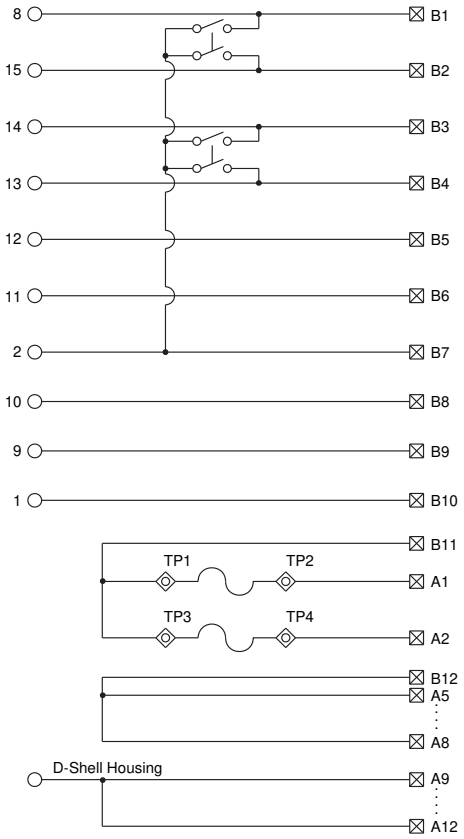

1492-AIFM4I-F-5

Fusible 4-Channel Input with 24V DC Blown Fuse Indicators, Test Points, 5 Terminals/Input

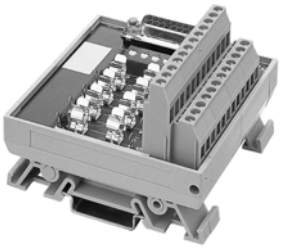

Application Notes

1. **Compatibility —** To ensure proper operation with the I/O module, do **not** exceed the voltage and current ratings of the AIFM.
2. **Wiring —** Refer to the Label Section on page 181. For Field-Side Wiring Diagrams, refer to the Wiring System web site information on page 186.
3. **Fusing —** Fuse holders are included with the AIFM. Fuses (5 x 20 mm) are not included. Do not exceed 2 A per input, 12 A per AIFM.
4. **Isolation —** The fuse clips and blown fuse indicators are internally connected to one power source field-side terminal. All inputs must reference the same power source.
5. **DIP Switches —** For ease of wiring, unused inputs can be jumpered to module common by closing the DIP switches (ON position) for analog modules that have this capability. Default switch position is OPEN/OFF/NOT jumpered together.
6. **Test Points —** When using a two-wire transmitter, test points (TP1-TP2) can be used to measure input loop current. Refer to the Pinout for test point circuit location.
7. **Extra Terminals —** Four field-side terminals are internally jumpered on the AIFM. They can be used for power source common connections.
8. **Shield Terminals —** Four field-side terminals are jumpered together on the AIFM and internally connected to the D-shell housing.
9. **Dimensions —** Refer to page 187.

Pinout

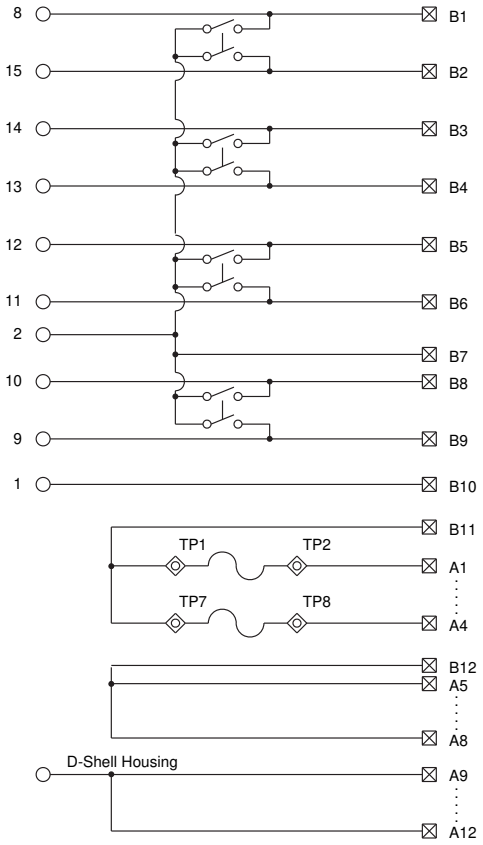

1492-AIFM8-F-5

Fusible 8-Channel Input with 24V DC Blown Fuse Indicators, 5 Terminals/Channel

Application Notes

1. **Compatibility —** To ensure proper operation with the I/O module, do **not** exceed the voltage and current ratings of the AIFM.
2. **Wiring —** Refer to the Label Section on page 181. For Field-Side Wiring Diagrams, refer to the Wiring System web site information on page 186.
3. **Fusing —** Fuse holders are included with the AIFM. Fuses (5 x 20 mm) are not included. Do not exceed 2 A per input, 12 A per AIFM.
4. **Isolation —** The fuse clips and blown fuse indicators are internally connected to one power source field-side terminal. All inputs must reference the same power source.
5. **DIP Switches —** For ease of wiring, unused inputs can be jumpered to module common by closing the DIP switches (ON position) for analog modules that have this capability. Default switch position is OPEN/OFF/NOT jumpered together.
6. **Extra Terminals —** Nine field-side terminals are internally jumpered on the AIFM. They can be used for power source common connections.
7. **Shield Terminals —** Eighteen field-side terminals are jumpered together on the AIFM and internally connected to the D-shell housing.
8. **Dimensions —** Refer to page 187.

Pinout

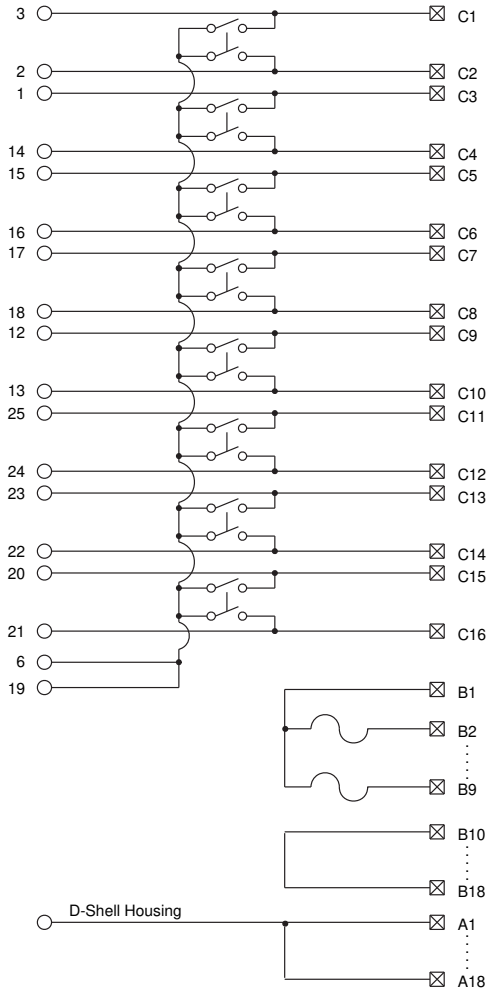

1492-AIFM16-F-3

Fusible 16-Channel Inputs with 24V DC Blown Fuse Indicators, 3 Terminals/Channel

Application Notes

1. **Compatibility —** To ensure proper operation with the I/O module, do **not** exceed the voltage and current ratings of the AIFM.
2. **Wiring —** Refer to the Label Section on page 181. For Field-Side Wiring Diagrams, refer to the Wiring System web site information on page 186.
3. **Fusing —** Fuse holders are included with the AIFM. Fuses (5 x 20 mm) are not included. Do not exceed 2 A per input, 12 A per AIFM.
4. **Isolation —** The fuse clips and blown fuse indicators are internally connected to one power source field-side terminal. All inputs must reference the same power source.
5. **DIP Switches —** For ease of wiring, unused inputs can be jumpered to module common by closing the DIP switches (ON position) for analog modules that have this capability. Default switch position is OPEN/OFF/NOT jumpered together.
6. **Shield Terminals —** Eighteen field-side terminals are jumpered together on the AIFM and internally connected to the D-shell housing.
7. **Dimensions —** Refer to page 187.

Pinout

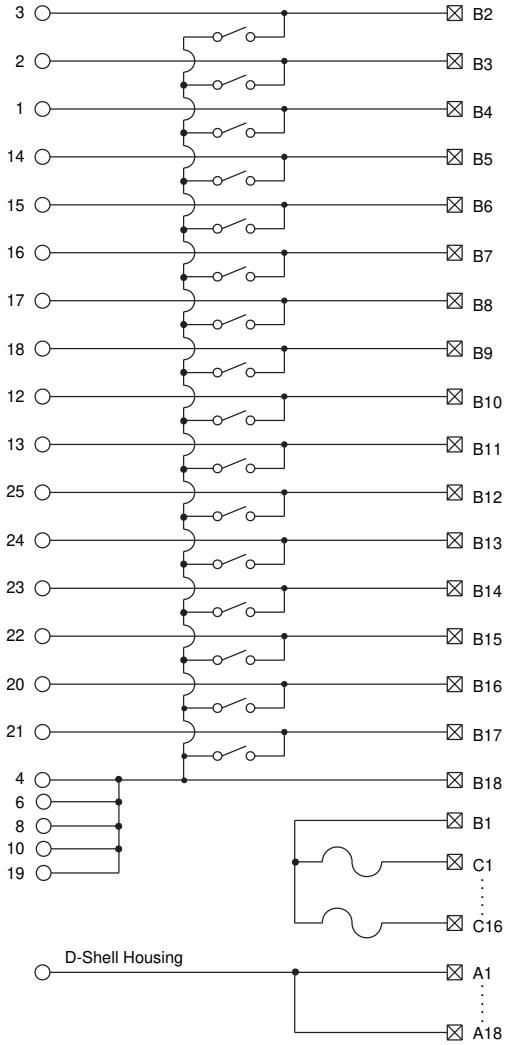

1492-AIFM16-F-5

Fusible 16-Channel Input with 24V DC Blown Fuse Indicators, 5 Terminals/Channel

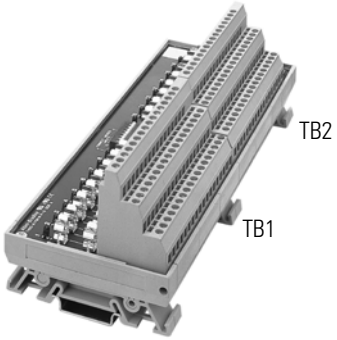

Application Notes

1. **Compatibility —** To ensure proper operation with the I/O module, do **not** exceed the voltage and current ratings of the AIFM.
2. **Wiring —** Refer to the Label Section on page 181. For Field-Side Wiring Diagrams, refer to the Wiring System web site information on page 186.
3. **Fusing —** Fuse holders are included with the AIFM. Fuses (5 x 20 mm) are not included. Do not exceed 2 A per input, 12 A per AIFM.
4. **Isolation —** The fuse clips and blown fuse indicators are internally connected to two separate power source field-side terminals. All inputs within a group(TB1 or TB2) must reference the same power source.
5. **DIP Switches —** For ease of wiring, unused inputs can be jumpered to module common by closing the DIP switches (ON position) for analog modules that have this capability. Default switch position is OPEN/OFF/NOT jumpered together.
6. **Extra Terminals —** Sixteen field-side terminals (C9…C16 on TB1 and TB2) are internally jumpered on the AIFM and connected to module common. Eighteen field-side terminals (B10…B18 on TB1 and TB2) are internally jumpered on the AIFM and can be used for power source common connections. There are two field-side terminals (A17 and A18 on TB1) that can be externally jumpered to connect the two groups of field-side terminals.
7. **Shield Terminals —** Sixteen field-side terminals are jumpered together on the AIFM and internally connected to the D-shell housing.
8. **Dimensions —** Refer to page 187.

Pinout

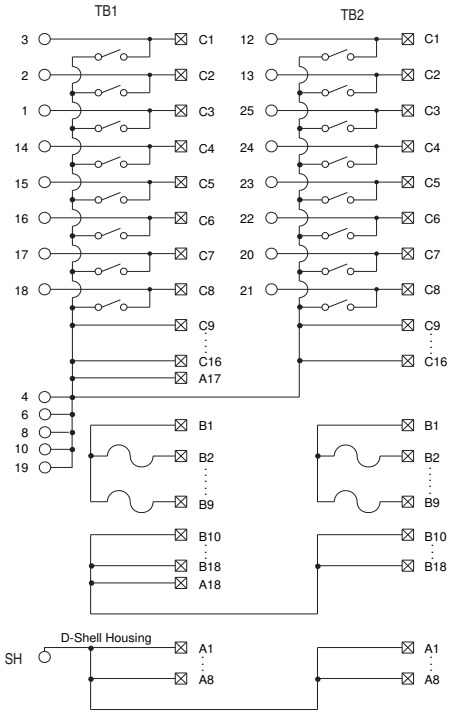

1492-AIFMQS

Fusible 4-Input/4 Output Channel with 8 Fuses & 24V DC Blown Fuse Indicators

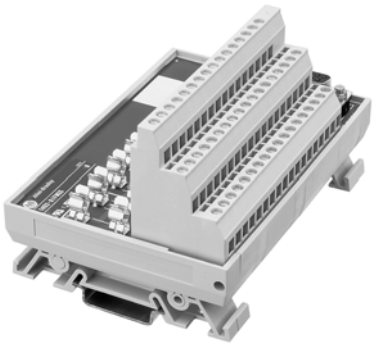

Application Notes

1. **Compatibility —** To ensure proper operation with the I/O module, do **not** exceed the voltage and current ratings of the AIFM.
2. **Wiring —** Refer to the Label Section on page 181. For Field-Side Wiring Diagrams, refer to the Wiring System web site information on page 186.
3. **Fusing —** Fuse holders are included with the AIFM. Fuses (5 x 20 mm) are not included. Do not exceed 3 A per input, 12 A per AIFM.
4. **Isolation —** The fuse clips and blown fuse indicators are internally connected to two separate power source field-side terminals. All inputs within a group must reference the same power source.
5. **Extra Terminals —** Four field-side terminals (on TB1) are internally jumpered on the AIFM and connected to module common. Four field-side terminals (on TB1) are internally jumpered on the AIFM and can be used for power source common connections.
6. **Shield Terminals —** Eight field-side terminals are jumpered together on the AIFM and internally connected to the D-shell housing.
7. **Dimensions —** Refer to page 187.

Pinout

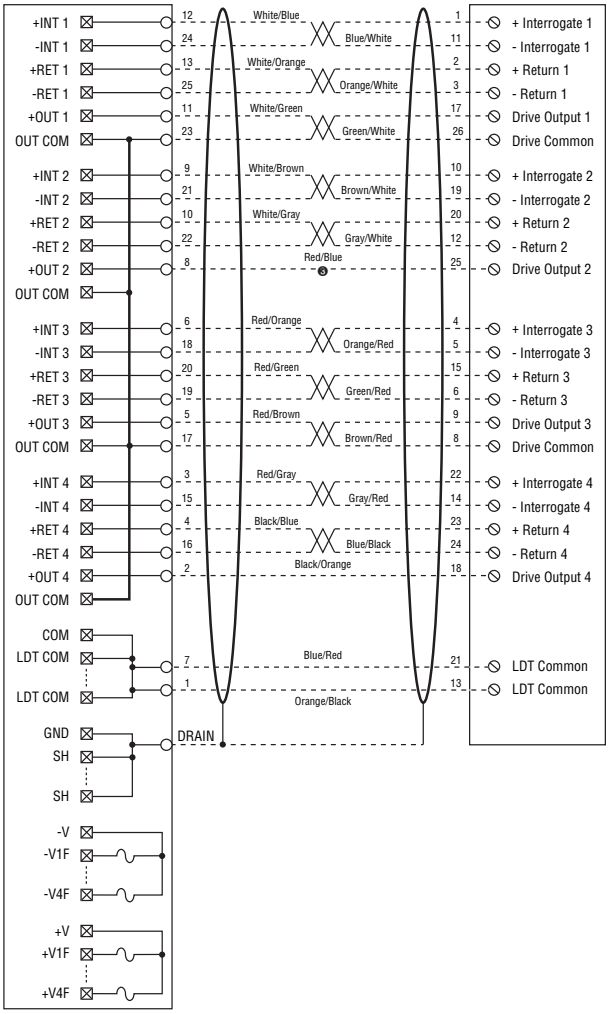

1492-AIFMPI

Fusible 8-Input/2 Output Channels

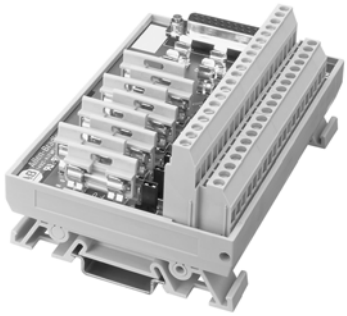

Application Notes

1. **Compatibility —** To ensure proper operation with the I/O module, do **not** exceed the voltage and current ratings of the AIFM.
2. **Wiring —** Refer to the Label Section on page 181. For Field-Side Wiring Diagrams, refer to the Wiring System web site information on page 186.
3. **Fusing —** Two fuse holders for the outputs are included with the AIFM. Eight fuses (0.25 A, 5 x 20 mm) are included with the fused supply inputs. Do not exceed 2 A per output.
4. **Isolation —** The fuse clips and blown fuse indicators are internally connected to one power source field-side terminal. All inputs must reference the same power source.
5. **Jumpers —** J0…J7 provide the option of connecting the negative inputs to the return. J8 commons the shield to the return. Default switch position is OPEN/OFF/NOT jumpered together.
6. **Shield Terminals —** Eight field-side terminals are jumpered together on the AIFM and internally connected to the D-shell housing.
7. The 1492-AIFMPI is designed exclusively for the 1757-PIM module.
8. **Dimensions —** Refer to page 187.

Pinout

Refer to page 167.

1492-AIFMPI, Continued

Pinout, Continued

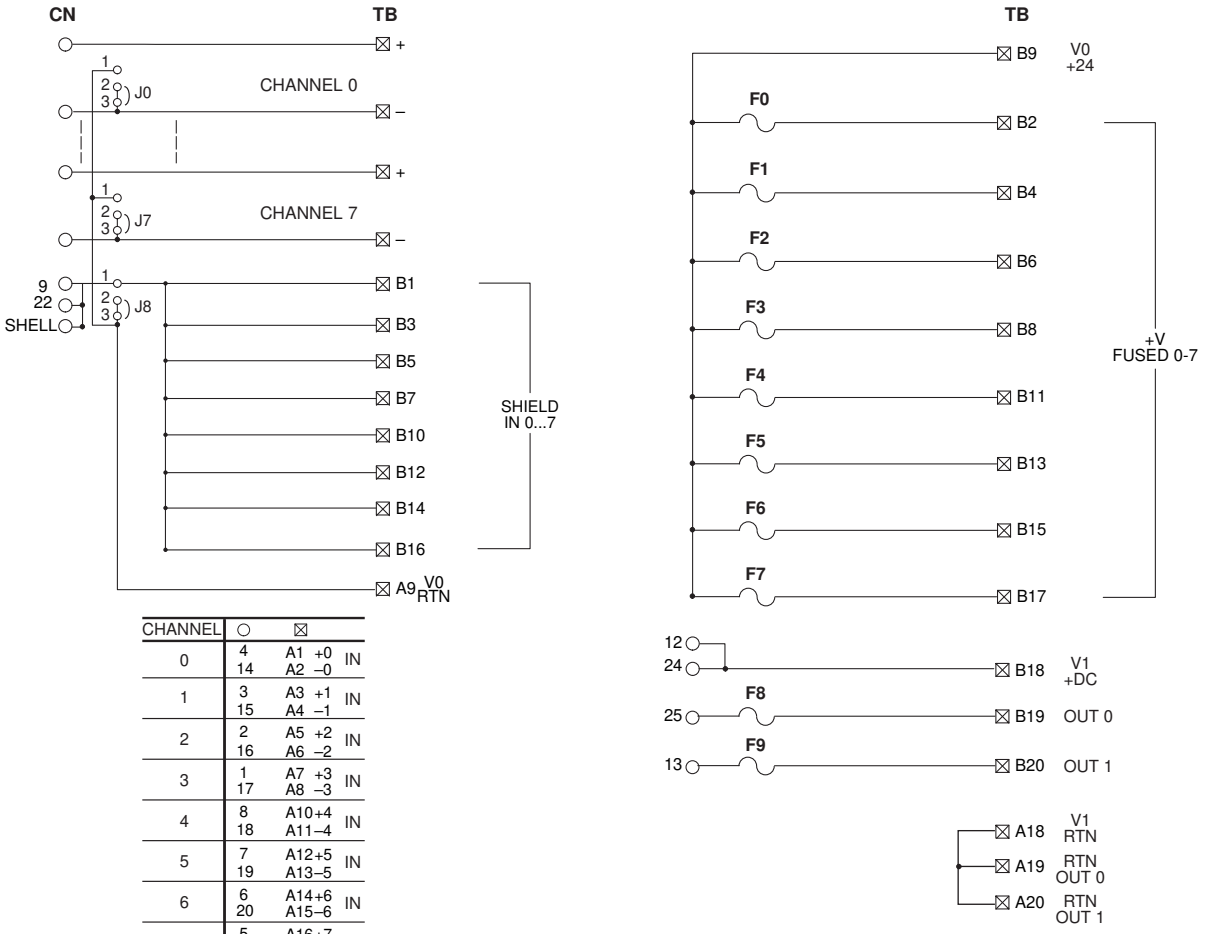

CHANNEL	○	⊠	
0	4 14	A1 +0 A2 –0	IN
1	3 15	A3 +1 A4 –1	IN
2	2 16	A5 +2 A6 –2	IN
3	1 17	A7 +3 A8 –3	IN
4	8 18	A10+4 A11–4	IN
5	7 19	A12+5 A13–5	IN
6	6 20	A14+6 A15–6	IN
7	5 21	A16+7 A17–7	IN

Analog Cable Specifications

Bulletin 1492 pre-wired cables are designed to minimize control wiring in a panel. Analog pre-wired cables, when used with an AIFM, replace the point-to-point wiring between Allen-Bradley programmable controller I/O modules and individual terminal blocks. The analog ready-to-wire cables provide one end of the cable pre-terminated for an AIFM (AIFM-ready cable).

Pre-Wired Cables

Specifications

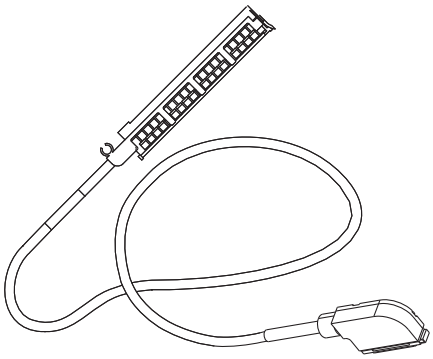

The pre-wired cables have a Bulletin 1746 Removable Terminal Block, Bulletin 1756 Removable Terminal Block, Bulletin 1769 Removable Terminal Block, Bulletin 1771 Wiring Arm, or Bul. 1794 (Flex) 37-pin D-Shell (mates with Cat. No. 1794-TB37DS) on one end and a D-shell on the other to connect to the AIFM. All analog cables have an overall shield and most have #22 AWG twisted pairs for additional noise immunity. In addition, most analog cables have prepared ring lugs on the drain wire for convenient grounding of the cable shield to the programmable controller chassis. The broad offering of analog pre-wired cables supports over 40 different Bulletin 1746, 1756, 1769, 1771, 700S, 700H, and 1794 analog, RTD, and thermocouple (1756 only) I/O modules.

Analog Cable Specifications, Continued

Pre-Wired Cables, Continued

Analog Pre-Wired Cable Specifications

Catalog Number and Length ❶	Standard Cable Lengths	I/O Module Connector	AIFM Connector	No. of Conductors ❷❸	Insulation Rating	Conductor Size	Nominal Outer Diameter
1492-ACABLE❶A	0.5, 1.0, 2.5, 5.0 m	1746-RT28 12-Position Removable Terminal Block	15-pin D-shell	5 Twisted Pairs	300V 80°C	22 AWG	7.44 mm (0.293")
1492-ACABLE❶B	0.5, 1.0, 2.5, 5.0 m	1746-RT26 2-Position and 1746-RT27 8-Position Removable Terminal Block	15-pin D-shell	5 Twisted Pairs	300V 80°C	22 AWG	7.44 mm (0.293")
1492-ACABLE❶C	0.5, 1.0, 2.5, 5.0 m	1746-RT25G Green Removable Terminal Block	25-pin D-shell	9 Twisted Pairs	300V 80°C	22 AWG	6.78 mm (0.267")
1492-ACABLE❶D	0.5, 1.0, 2.5, 5.0 m	1746-RT25G Green Removable Terminal Block	25-pin D-shell	20 Conductors	300V 80°C	22 AWG	8.43 mm (0.332")
1492-ACABLE❶E	0.5, 1.0, 2.5, 5.0 m	1771-WG (21 terminal)	25-pin D-shell	9 Twisted Pairs	300V 80°C	22 AWG	6.78 mm (0.267")
1492-ACABLE❶F	0.5, 1.0, 2.5, 5.0 m	1771-WG (21 terminal) Wiring Arm	25-pin D-shell	20 Conductors	300V 80°C	22 AWG	8.43 mm (0.332")
1492-ACABLE❶G	0.5, 1.0, 2.5, 5.0 m	1771-WC (10 terminal) Wiring Arm	15-pin D-shell	5 Twisted Pairs	300V 80°C	22 AWG	7.44 mm (0.293")
1492-ACABLE❶H	0.5, 1.0, 2.5, 5.0 m	1771-WF (18 terminal) Wiring Arm	25-pin D-shell	9 Twisted Pairs	300V 80°C	22 AWG	6.78 mm (0.267")
1492-ACABLE❶J	0.5, 1.0, 2.5, 5.0 m	1771-WF (18 terminal) Wiring Arm	25-pin D-shell	20 Conductors	300V 80°C	22 AWG	8.43 mm (0.332")
1492-ACABLE❶K	0.5, 1.0, 2.5, 5.0 m	1746-RT25G Green Removable Terminal Block	25-pin D-shell	11 Twisted Pairs	300V 80°C	22 AWG	11.5 mm (0.45")
1492-ACABLE❶L	0.5, 1.0, 2.5, 5.0 m	1746-RT28 12-Position Removable Terminal Block	15-pin D-shell	5 Twisted Pairs	300V 80°C	22 AWG	7.44 mm (0.293")
1492-ACABLE❶M	0.5, 1.0, 2.5, 5.0 m	1756-TBCH 36-Position Removable Terminal Block	25-pin D-shell	11 Twisted Pairs	300V 80°C	22 AWG	11.5 mm (0.45")
1492-ACABLE❶P	0.5, 1.0, 2.5, 5.0 m	1746-RT25G Green Removable Terminal Block	25-pin D-shell	11 Twisted Pairs	300V 80°C	22 AWG	11.5 mm (0.45")
1492-ACABLE❶Q	0.5, 1.0, 2.5, 5.0 m	1746-QS (26 terminal D-shell)	25-pin D-shell	12 Twisted Pairs	300V 80°C	22 AWG	10.2 mm (0.40")
1492-ACABLE❶R	0.5, 1.0, 2.5, 5.0 m	1746-RT25G Green Removable Terminal Block	25-pin D-shell	20 Conductors	300V 80°C	22 AWG	8.43 mm (0.332")
1492-ACABLE❶X	0.5, 1.0, 2.5, 5.0 m	1756-TBNH 20-Position Removable Terminal Block	25-pin D-shell	9 Twisted Pairs	300V 80°C	22 AWG	6.78 mm (0.267")
1492-ACABLE❶Y	0.5, 1.0, 2.5, 5.0 m	1756-TBNH 20-Position Removable Terminal Block	25-pin D-shell	9 Twisted Pairs	300V 80°C	22 AWG	6.78 mm (0.267")
1492-ACABLE❶YT	0.5, 1.0, 2.5, 5.0 m	1756-TBNH 20-Position Removable Terminal Block	25-pin D-shell	9 Twisted Pairs	300V 80°C	22 AWG	6.78 mm (0.267")
1492-ACABLE❶Z	0.5, 1.0, 2.5, 5.0 m	1756-TBNH 20-Position Removable Terminal Block	25-pin D-shell	20 Conductors	300V 80°C	22 AWG	8.43 mm (0.332")
1492-ACABLE❶A46	0.5, 1.0, 2.5, 5.0 m	1746-RT25G Green Removable Terminal Block	25-pin D-shell	20 Conductors	300V 80°C	22 AWG	10.2 mm (0.40")
1492-ACABLE❶TA	0.5, 1.0, 2.5, 5.0 m	1756-TBCH 36-Position Removable Terminal Block	25-pin D-shell	20 Conductors	300V 80°C	22 AWG	8.43 mm (0.332")
1492-ACABLE❶TB	0.5, 1.0, 2.5, 5.0 m	1756-TBCH 36-Position Removable Terminal Block	25-pin D-shell	20 Conductors	300V 80°C	22 AWG	8.43 mm (0.332")
1492-ACABLE❶TC	0.5, 1.0, 2.5, 5.0 m	1756-TBCH 36-Position Removable Terminal Block	25-pin D-shell	5 Twisted Pairs	300V 80°C	22 AWG	8.43 mm (0.332")
1492-ACABLE❶TD	0.5, 1.0, 2.5, 5.0 m	1756-TBCH 36-Position Removable Terminal Block	25-pin D-shell	5 Twisted Pairs	300V 80°C	22 AWG	8.43 mm (0.332")
1492-ACABLE❶UA	0.5, 1.0, 2.5, 5.0 m	1756-TBCH 36-Position Removable Terminal Block	25-pin D-shell	20 Conductors	300V 80°C	22 AWG	8.43 mm (0.332")
1492-ACABLE❶UB	0.5, 1.0, 2.5, 5.0 m	1756-TBCH 36-Position Removable Terminal Block	25-pin D-shell	20 Conductors	300V 80°C	22 AWG	8.43 mm (0.332")
1492-ACABLE❶UC	0.5, 1.0, 2.5, 5.0 m	1756-TBCH 36-Position Removable Terminal Block	25-pin D-shell	9 Twisted Pairs	300V 80°C	22 AWG	6.78 mm (0.267")
1492-ACABLE❶UD	0.5, 1.0, 2.5, 5.0 m	1756-TBCH 36-Position Removable Terminal Block	25-pin D-shell	9 Twisted Pairs	300V 80°C	22 AWG	6.78 mm (0.267")
1492-ACABLE❶VA	0.5, 1.0, 2.5, 5.0 m	1756-TBNH 20-Position Removable Terminal Block	15-pin D-shell	20 Conductors	300V 80°C	22 AWG	8.43 mm (0.332")
1492-ACABLE❶VB	0.5, 1.0, 2.5, 5.0 m	1756-TBNH 20-Position Removable Terminal Block	15-pin D-shell	20 Conductors	300V 80°C	22 AWG	8.43 mm (0.332")
1492-ACABLE❶WA	0.5, 1.0, 2.5, 5.0 m	1756-TBNH 20-Position Removable Terminal Block	25-pin D-shell	9 Twisted Pairs	300V 80°C	22 AWG	6.78 mm (0.267")
1492-ACABLE❶WB	0.5, 1.0, 2.5, 5.0 m	1756-TBNH 20-Position Removable Terminal Block	25-pin D-shell	9 Twisted Pairs	300V 80°C	22 AWG	6.78 mm (0.267")
1492-ACABLE❶XA	0.5, 1.0, 2.5, 5.0 m	1756-TBCH 36-Position Removable Terminal Block	25-pin D-shell	11 Twisted Pairs	300V 80°C	22 AWG	11.5 mm (0.45")
1492-ACABLE❶XB	0.5, 1.0, 2.5, 5.0 m	1756-TBCH 36-Position Removable Terminal Block	25-pin D-shell	11 Twisted Pairs	300V 80°C	22 AWG	11.5 mm (0.45")
1492-ACABLE❶ZA	0.5, 1.0, 2.5, 5.0 m	1756-TBCH 36-Position Removable Terminal Block	25-pin D-shell	20 Conductors	300V 80°C	22 AWG	8.43 mm (0.332")
1492-ACABLE❶ZB	0.5, 1.0, 2.5, 5.0 m	1756-TBCH 36-Position Removable Terminal Block	25-pin D-shell	20 Conductors	300V 80°C	22 AWG	8.43 mm (0.332")
1492-ACABLE❶ZC	0.5, 1.0, 2.5, 5.0 m	1756-TBCH 36-Position Removable Terminal Block	25-pin D-shell	20 Conductors	300V 80°C	22 AWG	8.43 mm (0.332")
1492-ACAB❶AA69	0.5, 1.0, 2.5, 5.0 m	1769-RTBN10 12-Position Removable Terminal Block	15-pin D-shell	5 Twisted Pairs	300V 80°C	22 AWG	7.44 mm (0.293")
1492-ACAB❶AB69	0.5, 1.0, 2.5, 5.0 m	1769-RTBN10 12-Position Removable Terminal Block	15-pin D-shell	5 Twisted Pairs	300V 80°C	22 AWG	7.44 mm (0.293")
1492-ACAB❶BA69	0.5, 1.0, 2.5, 5.0 m	1769-RTBN18 20-Position Removable Terminal Block	15-pin D-shell	5 Twisted Pairs	300V 80°C	22 AWG	7.44 mm (0.293")
1492-ACAB❶BB69	0.5, 1.0, 2.5, 5.0 m	1769-RTBN18 20-Position Removable Terminal Block	15-pin D-shell	5 Twisted Pairs	300V 80°C	22 AWG	7.44 mm (0.293")
1492-ACAB❶BC69	0.5, 1.0, 2.5, 5.0 m	1769-RTBN18 20-Position Removable Terminal Block	15-pin D-shell	5 Twisted Pairs	300V 80°C	22 AWG	7.44 mm (0.293")
1492-ACAB❶BD69	0.5, 1.0, 2.5, 5.0 m	1769-RTBN18 20-Position Removable Terminal Block	15-pin D-shell	5 Twisted Pairs	300V 80°C	22 AWG	7.44 mm (0.293")
1492-ACAB❶C69	0.5, 1.0, 2.5, 5.0 m	1769-RTBN18 20-Position Removable Terminal Block	25-pin D-shell	20 Conductors	300V 80°C	22 AWG	8.43 mm (0.332")
1492-ACAB❶CA69	0.5, 1.0, 2.5, 5.0 m	1769-RTBN18 20-Position Removable Terminal Block	25-pin D-shell	20 Conductors	300V 80°C	22 AWG	8.43 mm (0.332")
1492-ACAB❶CB69	0.5, 1.0, 2.5, 5.0 m	1769-RTBN18 20-Position Removable Terminal Block	25-pin D-shell	20 Conductors	300V 80°C	22 AWG	8.43 mm (0.332")
1492-ACAB❶CC69	0.5, 1.0, 2.5, 5.0 m	1769-RTBN18 20-Position Removable Terminal Block	25-pin D-shell	20 Conductors	300V 80°C	22 AWG	8.43 mm (0.332")
1492-ACAB❶D69	0.5, 1.0, 2.5, 5.0 m	1769-RTBN18 20-Position Removable Terminal Block	25-pin D-shell	20 Conductors	300V 80°C	22 AWG	8.43 mm (0.332")
1492-ACAB❶EA69	0.5, 1.0, 2.5, 5.0 m	1769-RTBN18 20-Position Removable Terminal Block	25-pin D-shell	20 Conductors	300V 80°C	22 AWG	8.43 mm (0.332")
1492-ACAB❶EB69	0.5, 1.0, 2.5, 5.0 m	1769-RTBN18 20-Position Removable Terminal Block	25-pin D-shell	20 Conductors	300V 80°C	22 AWG	8.43 mm (0.332")
1492-ACAB❶ED69	0.5, 1.0, 2.5, 5.0 m	1769-RTBN18 20-Position Removable Terminal Block	25-pin D-shell	20 Conductors	300V 80°C	22 AWG	8.43 mm (0.332")
1492-ACAB❶HA69	0.5, 1.0, 2.5, 5.0 m	1769-RTBN18 20-Position Removable Terminal Block	25-pin D-shell	11 Twisted Pairs	300V 80°C	22 AWG	11.5 mm (0.45")

Analog Pre-Wired Cable Specifications

Catalog Number and Length ❶	Standard Cable Lengths	I/O Module Connector	AIFM Connector	No. of Conductors ❷❸	Insulation Rating	Conductor Size	Nominal Outer Diameter
1492-ACAB❶Z7H	0.5, 1.0, 2.5, 5.0 m	20C-DA1-A or 20C-DA1-B I/O Board	25-pin D-shell	9 Twisted Pairs	300V 80°C	22 AWG	6.78 mm (0.267")
1492-ACAB❶Z7S	0.5, 1.0, 2.5, 5.0 m	Terminal TB1 (Pins 1…12)	25-pin D-shell	9 Twisted Pairs	300V 80°C	22 AWG	6.78 mm (0.267")
1492-ACAB❶X7S	0.5, 1.0, 2.5, 5.0 m	Terminal TB1 (Pins 13…25)	25-pin D-shell	9 Twisted Pairs	300V 80°C	22 AWG	6.78 mm (0.267")
1492-ACAB❶Z94	0.5, 1.0, 2.5, 5.0 m	37-Pin D-Shell Connector to Mate with Cat. No. 1794-TB37DS Base	25-pin D-shell	20 Conductors	300V 80°C	22 AWG	8.43 mm (0.332")

❶ Cables are available in standard lengths of 0.5 m, 1.0 m, 2.5 m and 5.0 m. To order, insert the desired cable length code into the catalog number (005 = 0.5 m, 010 = 1.0 m, 025 = 2.5 m, and 050 = 5.0 m). Example: **Catalog Number 1492-ACABLE005A** is for a 0.5 m cable for the 1746-NI4 I/O Module. Also refer to Build-to-Order Length Cables on page 65.

❷ All pre-wired analog cables have an overall shield. On 1492-ACABLE❶C and 1492-ACABLE❶D, the drain wire is connected to the shield terminal on the I/O module connector. All other 1492-ACABLEs have a ring lug on the 7.87" (200 mm) exposed drain wire at the I/O module end of the cable.

❸ Not every connection is always used.

Analog Cable Specifications, Continued

Pinouts

Analog Pre-Wired Cables

The following diagrams indicate how the analog pre-wired cables are connected on both ends. The description listed first is the wire color of the conductor connected to the screw terminal on the respective Wiring Arm or Removable Terminal Block. The number that follows in parentheses is the corresponding pin number in the D-shell connector on the other end.

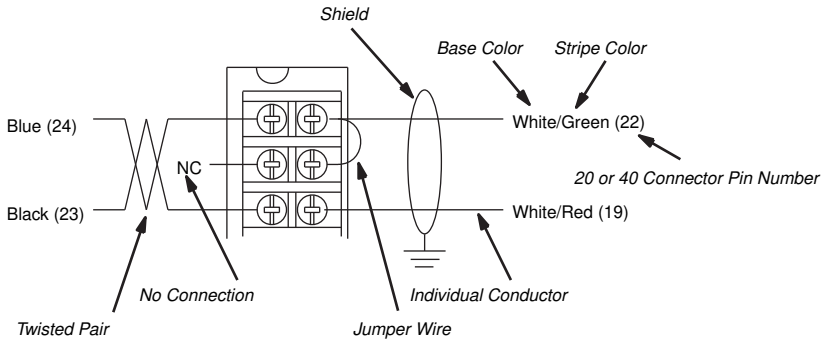

Output Pin Connector Definition

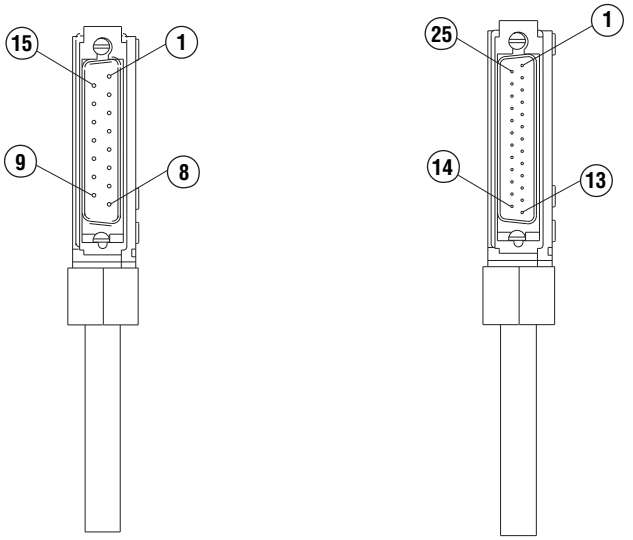

15-Pin D-Shell Connector 25-Pin D-Shell Connector

AIFM Mating Connector Definition

Analog Cable Specifications, Continued

Pinouts, Continued

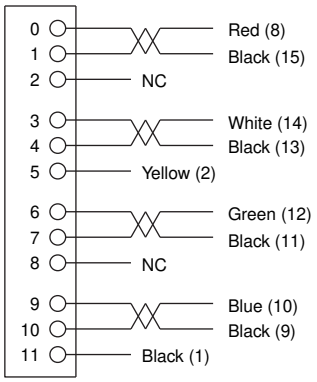

1492-ACABLE___A

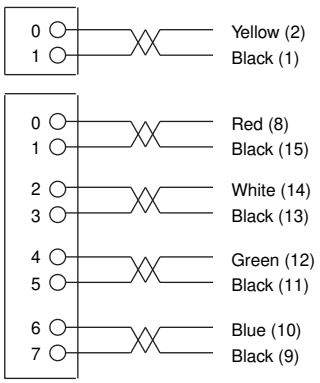

1492-ACABLE___B

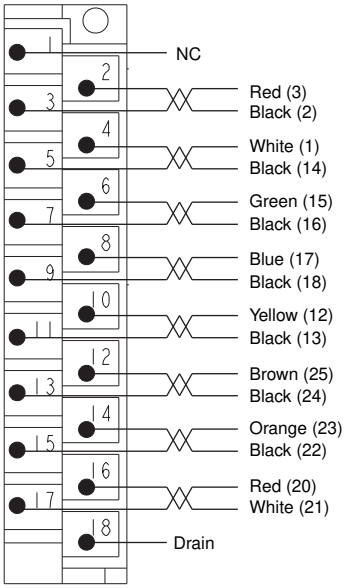

1492-ACABLE___C

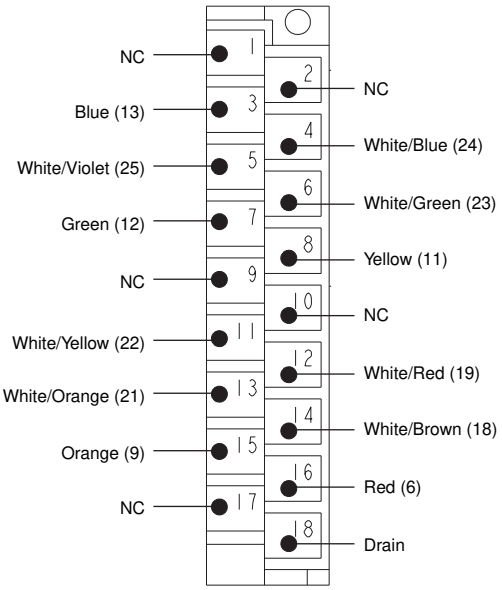

1492-ACABLE___D

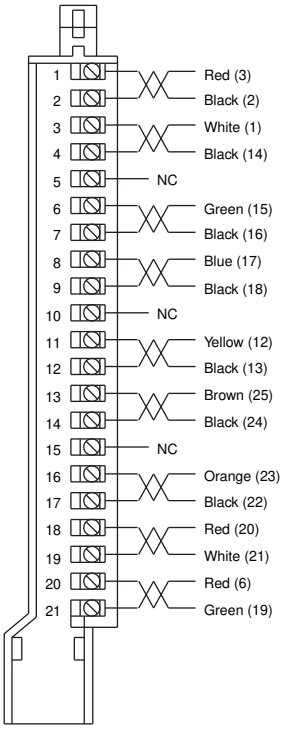

1492-ACABLE___E

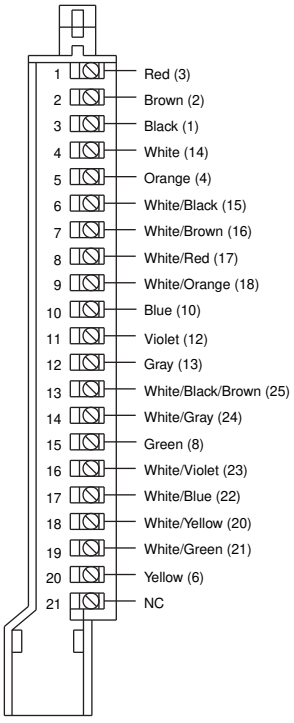

1492-ACABLE___F

Analog Cable Specifications, Continued

Pinouts, Continued

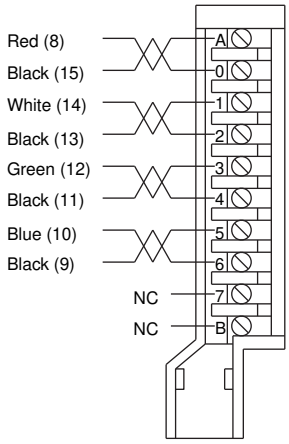

1492-ACABLE___G

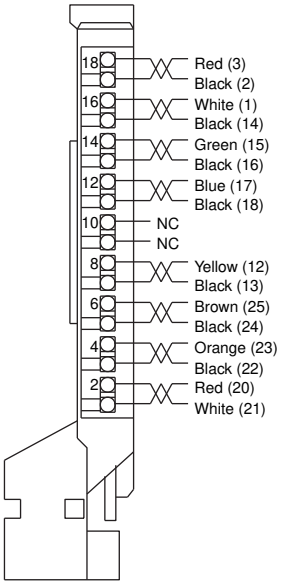

1492-ACABLE___H

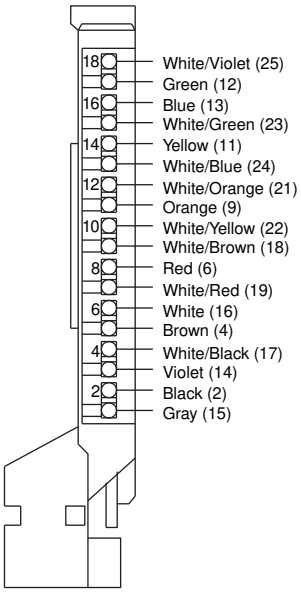

1492-ACABLE___J

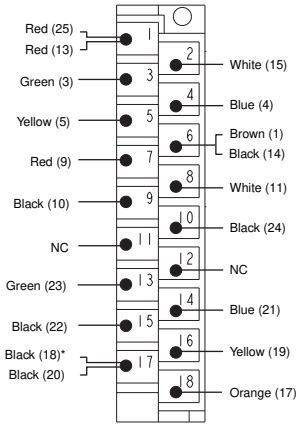

1492-ACABLE___K*

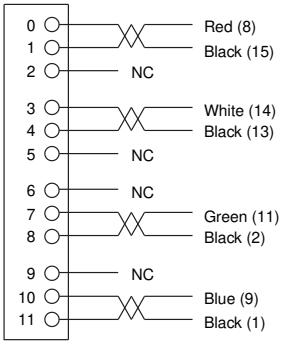

1492-ACABLE___L

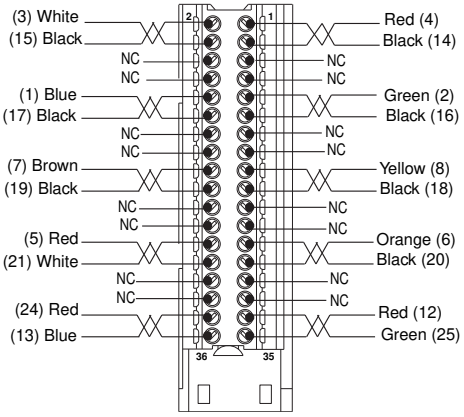

1492-ACABLE___M

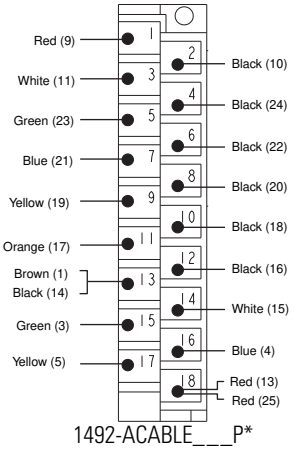

1492-ACABLE___P*

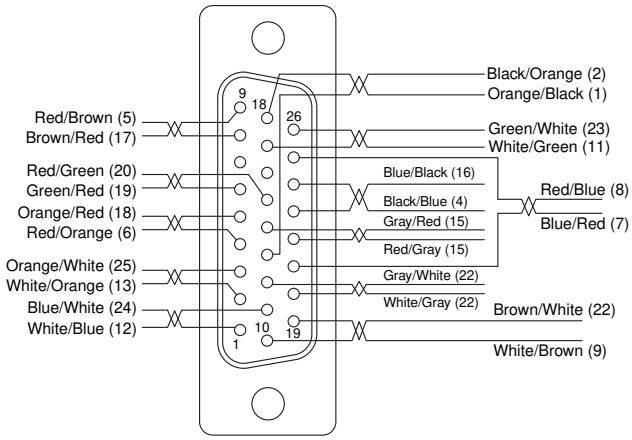

1492-ACABLE___Q

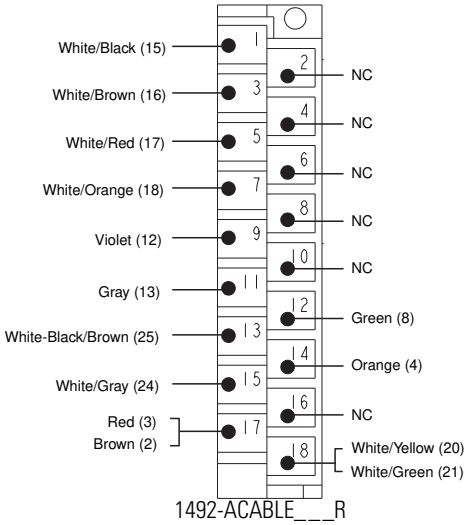

1492-ACABLE___R

* Cable uses twisted pair conductors.

Analog Cable Specifications, Continued

Pinouts, Continued

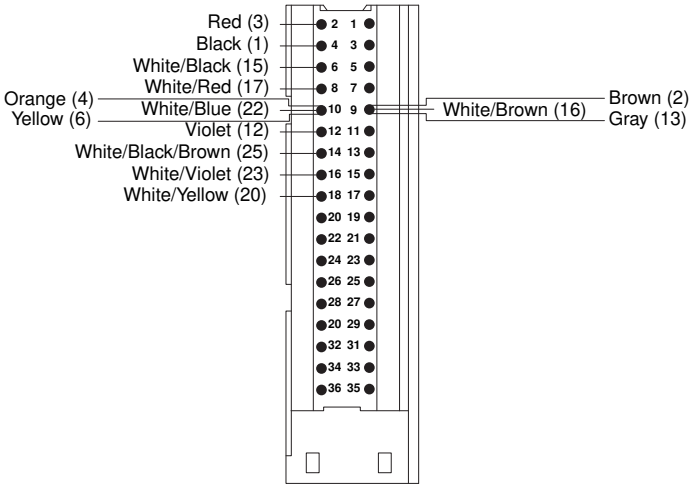

1492-ACABLE___TA

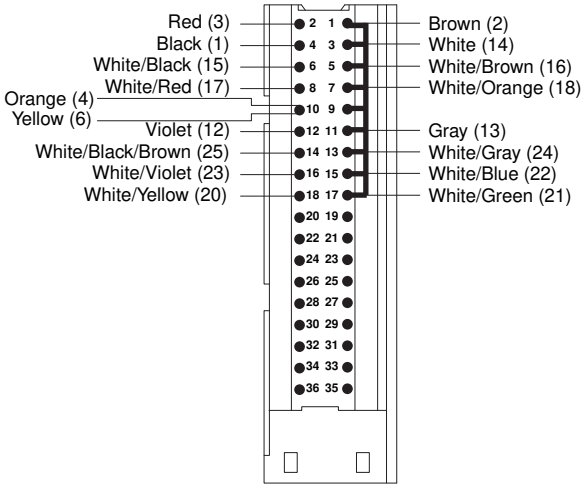

1492-ACABLE___TB

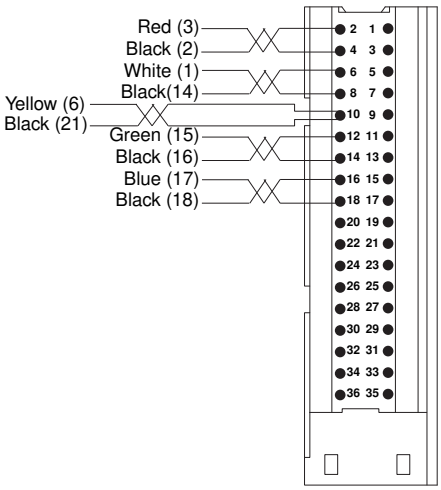

1492-ACABLE___TC

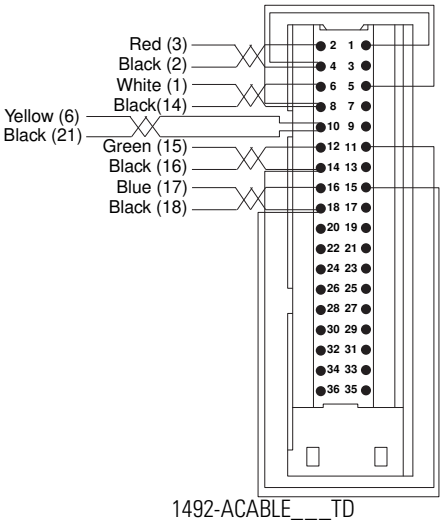

1492-ACABLE___TD

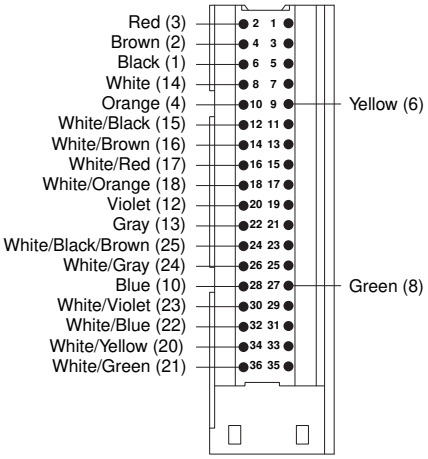

1492-ACABLE___UA

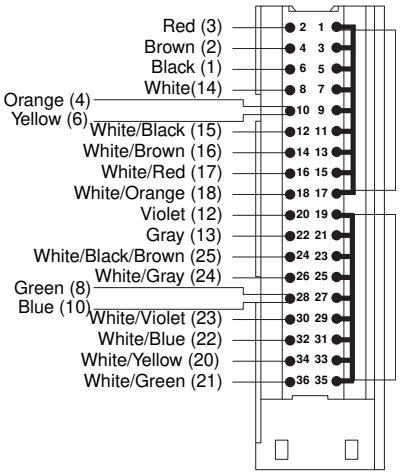

1492-ACABLE___UB

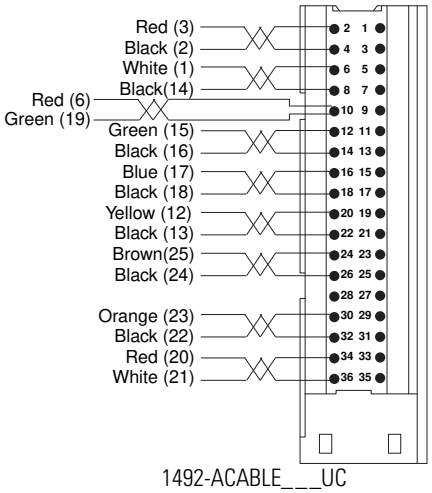

1492-ACABLE___UC

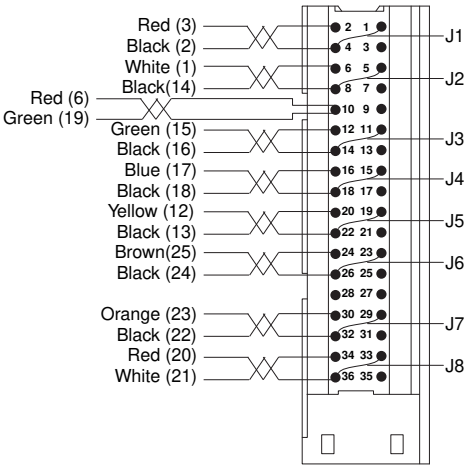

1492-ACABLE___UD

Analog Cable Specifications, Continued

Pinouts, Continued

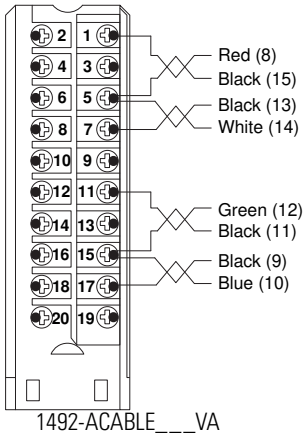

1492-ACABLE___VA

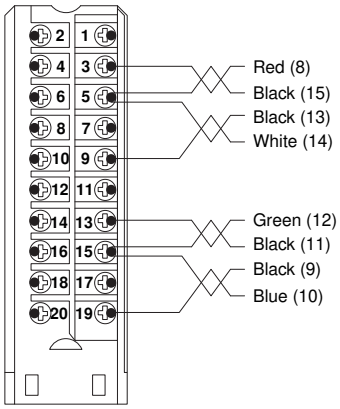

1492-ACABLE___VB

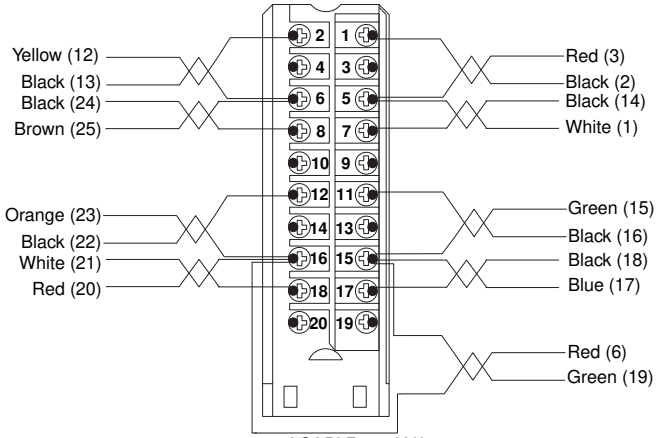

1492-ACABLE___WA

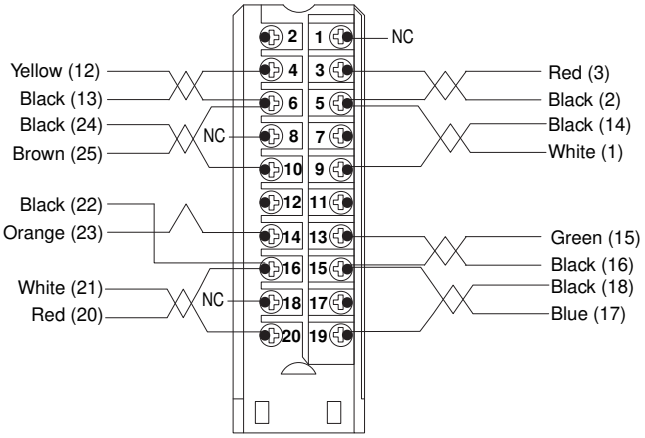

1492-ACABLE___WB

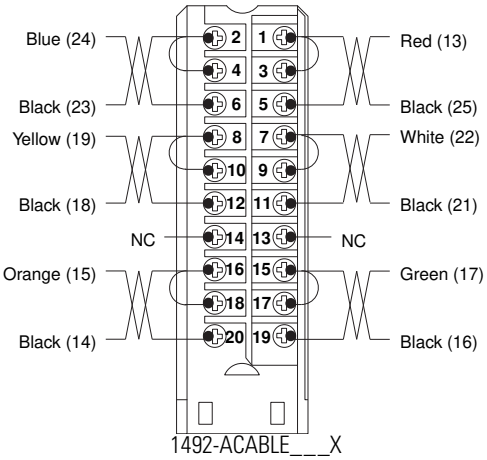

1492-ACABLE___X

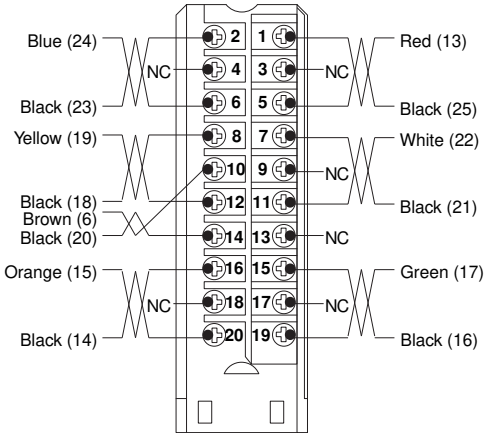

1492-ACABLE___Y

Analog Cable Specifications, Continued

Pinouts, Continued

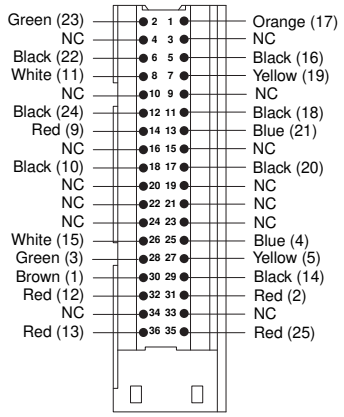

1492-ACABLE___XA*

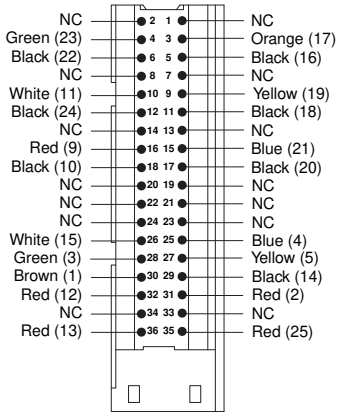

1492-ACABLE___XB*

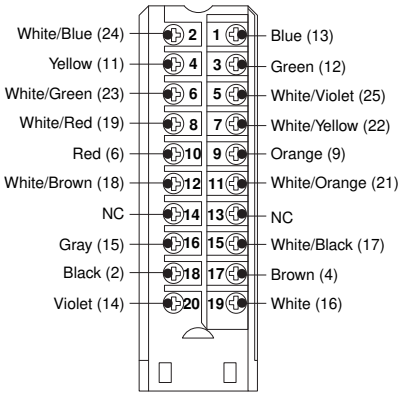

1492-ACABLE___Z

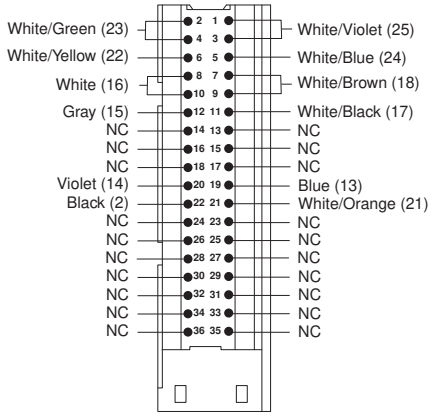

1492-ACABLE___ZA

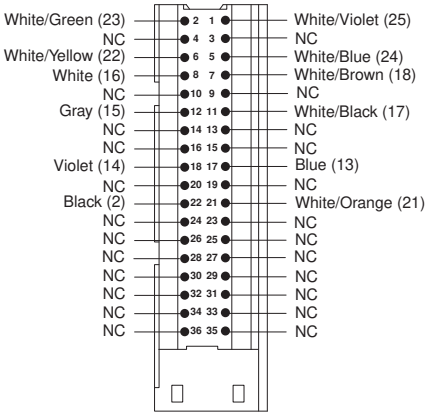

1492-ACABLE___ZB

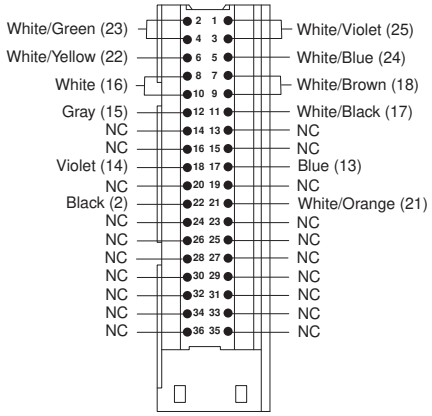

1492-ACABLE___ZC

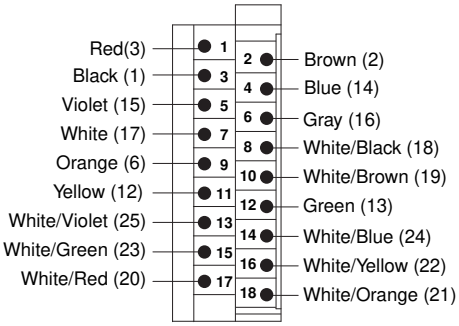

1492-ACAB___A46
(Green RTB)

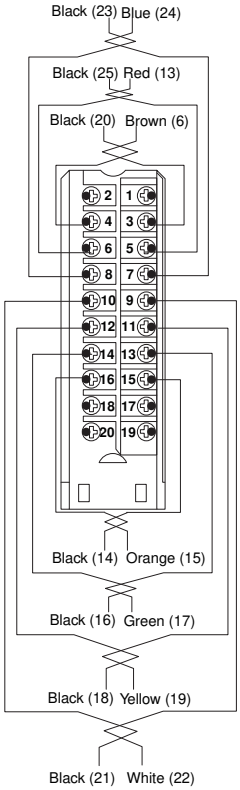

1492-ACABLE___YT

* Cable uses twisted pair conductors.

Analog Cable Specifications, Continued

Pinouts, Continued

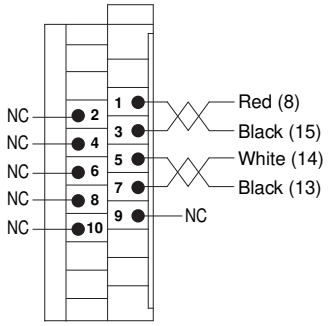

1492-ACAB___AA69

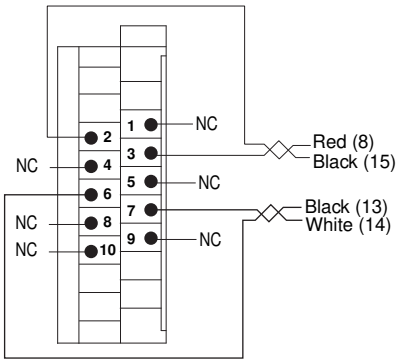

1492-ACAB___AB69

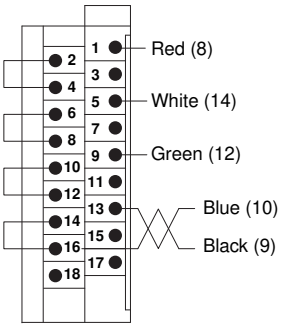

1492-ACAB___BA69

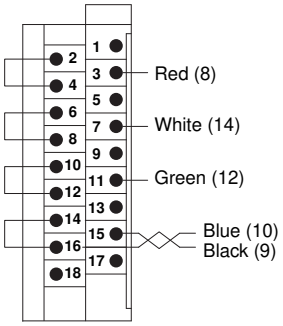

1492-ACAB___BB69

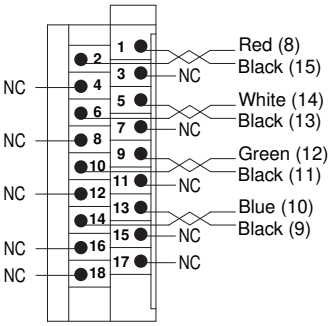

1492-ACAB___BC69

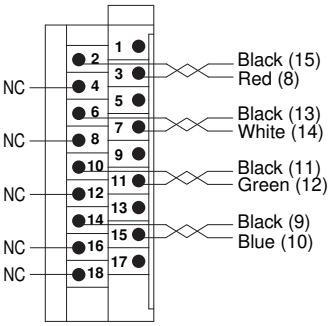

1492-ACAB___BD69

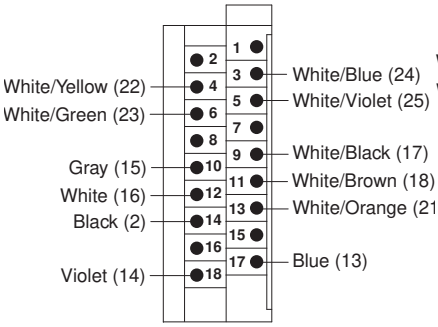

1492-ACAB___CA69

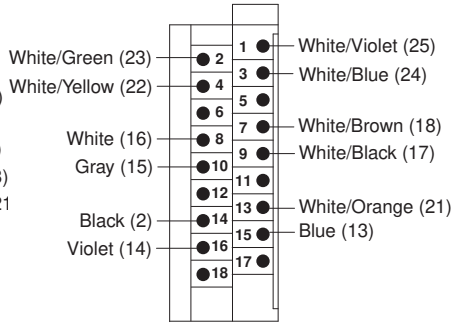

1492-ACAB___CB69

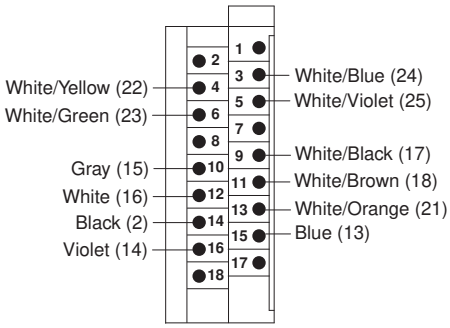

1492-ACAB___CC69

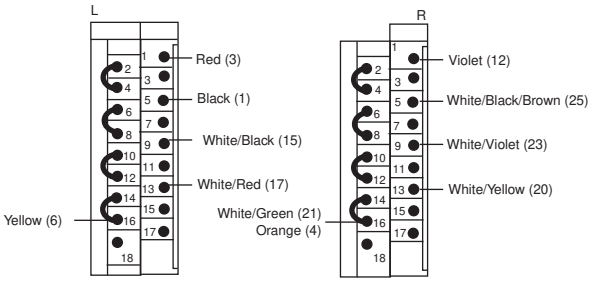

1492-ACAB___EA69 ❶

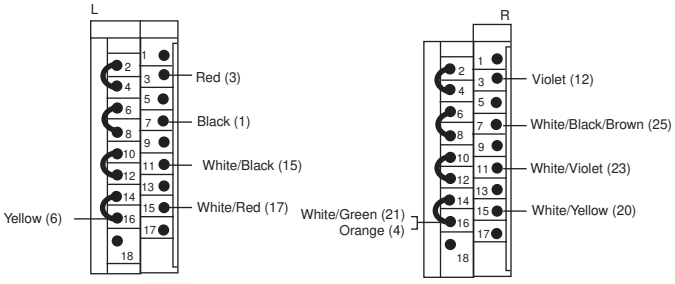

1492-ACAB___EB69 ❶

Analog Cable Specifications, Continued

Pinouts, Continued

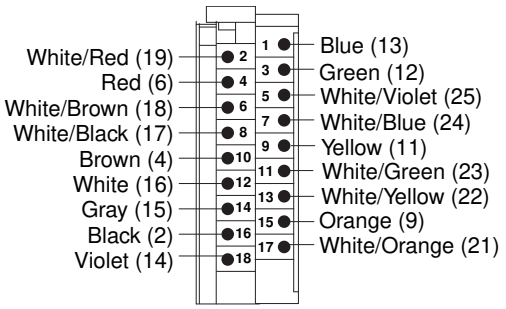

1492-ACAB___C69

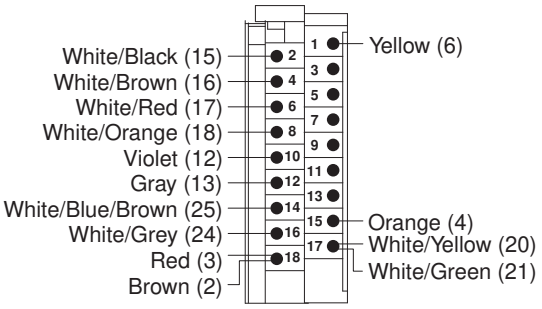

1492-ACAB___D69

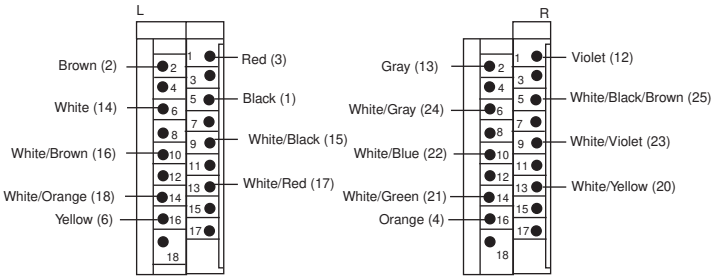

1492-ACAB___EC69 ❶

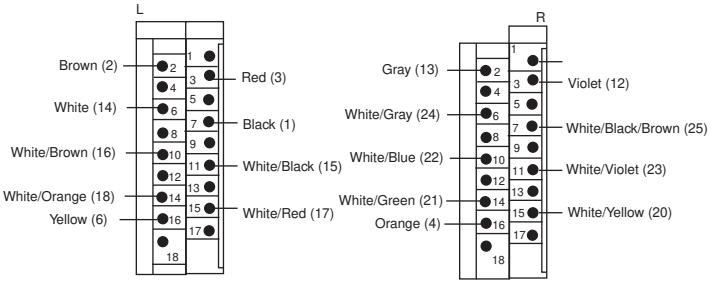

1492-ACAB___ED69 ❶

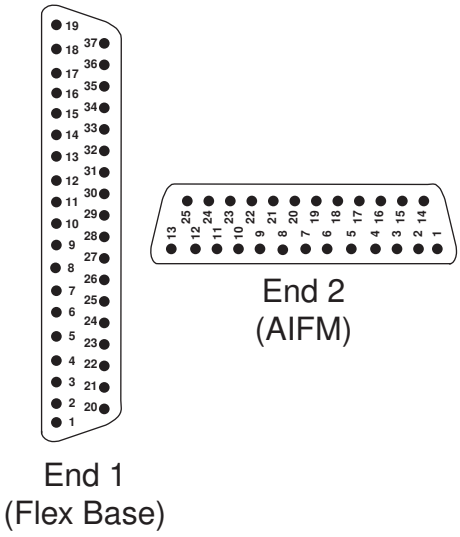

1492-ACAB___Z94

Cable Wiring Table Conductor for 1492-ACAB__Z94

Connector 37-Pin D-Shell, End 1	Conductor Color Code	Connectors 25-Pin D-Shell, End 2		Connector 37-Pin D-Shell, End 1	Conductor Color Code	Connectors 25-Pin D-Shell, End 2
1	Black	—		31	White/Brown	13
2	Brown	—		12	White/Red	25
19	Red	3		30	White/Orange	24
37	Orange	2		10	White/Yellow	23
18	Yellow	1		28	White/Green	22
36	Green	14		9	White/Blue	20
16	Blue	15		27	White/Violet	21
34	Violet	16		3	White/Grey	6
15	Grey	17		21	White/Black/Brown	19
33	White	18		5	Shield	Case
13	White/Black	12		—	—	—

❶ Cable is made up of two (Left & Right pair) individual terminal blocks.

Analog Cable Specifications, Continued

Pinouts, Continued

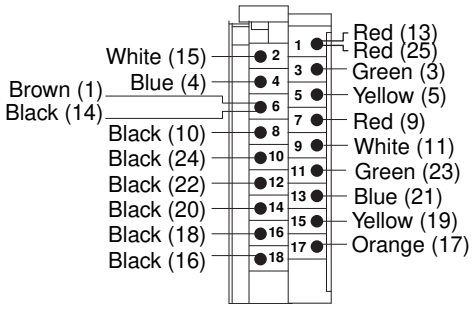

1492-ACAB___HA69*

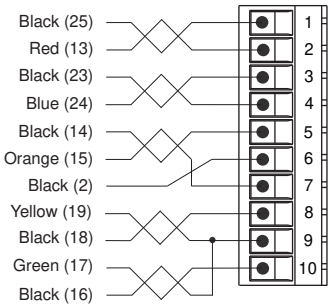

1492-ACAB①Z7H

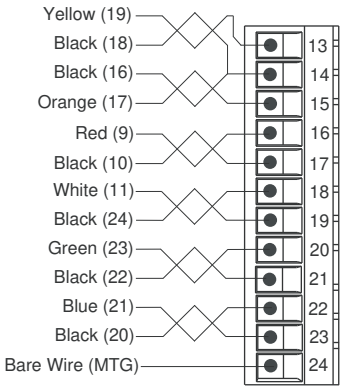

1492-ACAB①X7S

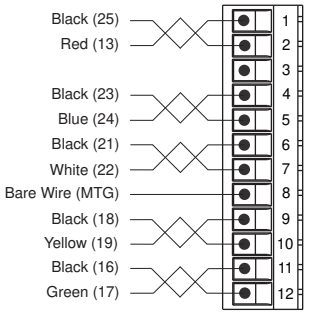

1492-ACAB①Z7S

❶ Cable is made up of two (Left & Right pair) individual terminal blocks.

* Cable uses twisted pair conductors.

Dimensions

Approximate dimensions are shown in millimeters unless otherwise indicated (to convert to inches, multiply by 0.0394). Dimensions are not to be used for manufacturing purposes.

Digital IFM Mating Connector

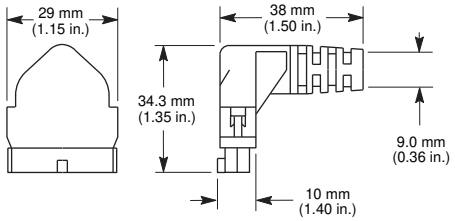

20-Point Cable Dimensions

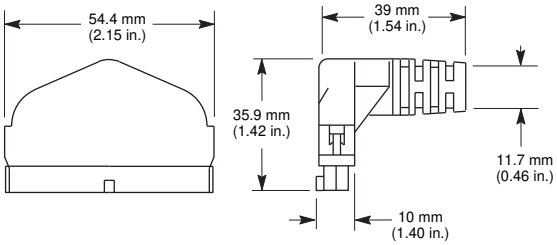

40-Point Cable Dimensions

Analog D-Shell Connector

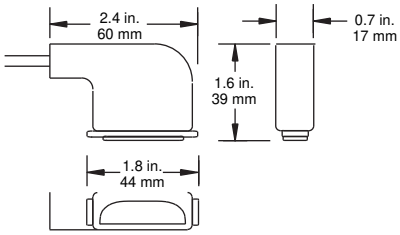

15-Pin D-Shell Dimensions

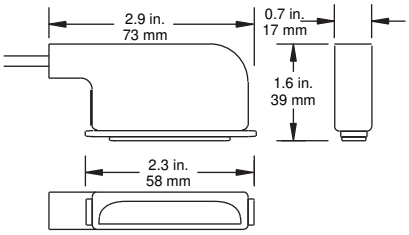

25-Pin D-Shell Dimensions

Wiring System Module Dimensions

The following is an example to show the length (L) and width (W) and Height (H) dimension layout for a Wiring System Module. Refer to the Quick Reference table on Page 187 for a complete list of module dimensions.

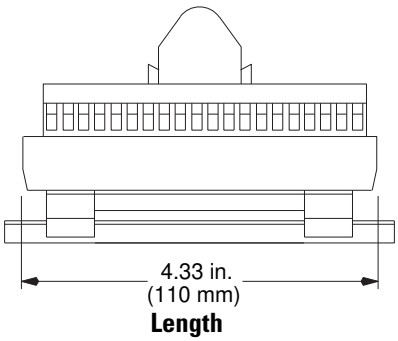

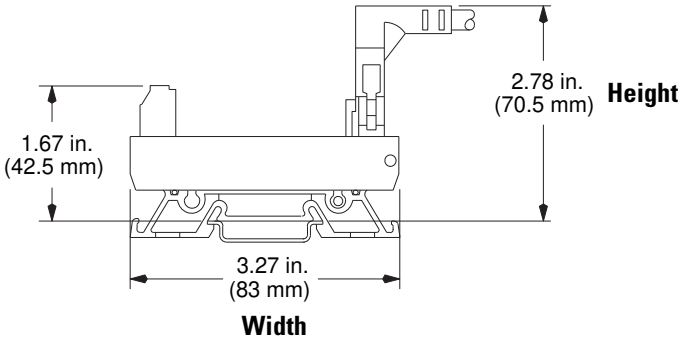

Marking Systems

Pre-Printed and Blank Adhesive Label Cards

All Bulletin 1492 IFMs, XIFMs, and AIFMs come with an adhesive label card. To see an example, refer to pages 182 and 183. The label card provides the field-side connection descriptions for the programmable controller I/O module. The label strips basically copy the wiring descriptions from the I/O module in the chassis down to the Interface Module terminals on the DIN Rail.

The label cards list all of the compatible I/O modules and their respective wiring descriptions. Depending on the I/O module that is used, the label strip(s) are simply peeled from the label card and applied to the field-side terminals on the Interface Module.

Labels are provided in the octal and decimal numbering systems for Bulletin 1746 I/O modules. Labels for Bulletin 1771 I/O modules are supplied in the octal numbering system, like the I/O modules themselves. Labels for Bulletin 1756 and 1769 I/O modules are supplied in the decimal numbering system, like the I/O modules. Interface Modules with LEDs or fuse clips come with the LEDs or fuse clips/blown fuse indicators numbered in decimal. LED and fuse labels are also provided in octal for use with Bulletin 1771 I/O modules. The LED or fuse conversion label(s) are placed directly on the circuit board of the Interface Module. For extra terminal modules, pre-printed labels are provided to identify the power bus(ses) or commoned terminals (middle and/or lower rows of terminals) on the Interface Module. For each I/O module, corresponding labels with L1, L2, COM, or +V are provided. The labels indicate isolated power busses or grouped commons with a different letter or number. For example, L1-A, L1-B, L1-C or COM1, COM2, COM3, etc.

In addition, if generic numbering of the field-side terminals is desired, numeric labels are provided. Examples: 1…20, 1…40, and evens and odds. For write-on identification, the label cards contain blank label strips (for field-side terminals) and rectangular boxes (for the large group marking area on each IFM, XIFM, or AIFM).

Examples of available label cards are on page 182. This information is helpful for determining field-side wiring layouts prior to installation. Label cards can be ordered as spare parts should a replacement be required. Refer to page 187 for a listing of label cards that apply to your IFM.

An example of how the labels are applied is shown below:

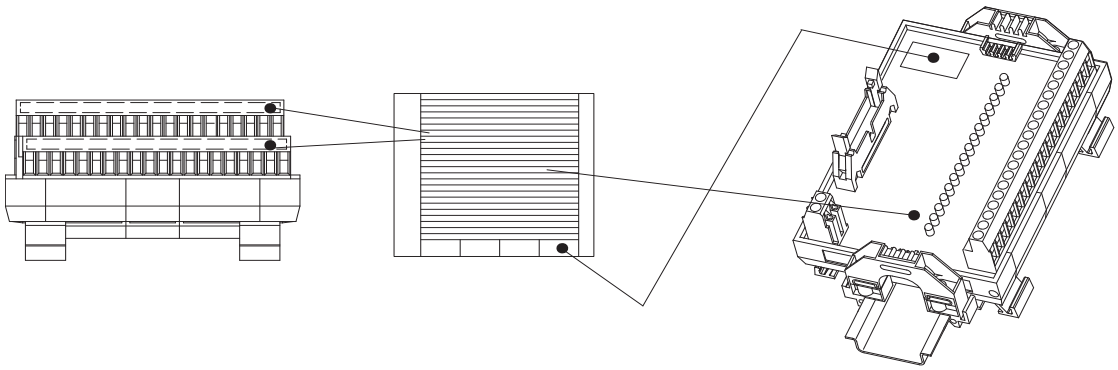

Marking Systems, Continued (Example Label Cards)

Part 1 of Adhesive Label Card for Catalog Numbers 1492-IFM20F, -IFM20D24, and -IFM20D120

I/O CAT. NO.	MODULE LABEL																			
1746-IA16, IM16, IN16 (AC)			IN 0	IN 1	IN 2	IN 3	IN 4	IN 5	IN 6	IN 7	IN 8	IN 9	IN 10	IN 11	IN 12	IN 13	IN 14	IN 15	L2	L2
			IN 00	IN 01	IN 02	IN 03	IN 04	IN 05	IN 06	IN 07	IN 10	IN 11	IN 12	IN 13	IN 14	IN 15	IN 16	IN 17	L2	L2
1746-IB16, IC16, IH16, IN16 (DC), ITB16			IN 0	IN 1	IN 2	IN 3	IN 4	IN 5	IN 6	IN 7	IN 8	IN 9	IN 10	IN 11	IN 12	IN 13	IN 14	IN 15	COM	COM
			IN 00	IN 01	IN 02	IN 03	IN 04	IN 05	IN 06	IN 07	IN 10	IN 11	IN 12	IN 13	IN 14	IN 15	IN 16	IN 17	COM	COM
1746-IG16	+V	+V	IN 0	IN 1	IN 2	IN 3	IN 4	IN 5	IN 6	IN 7	IN 8	IN 9	IN 10	IN 11	IN 12	IN 13	IN 14	IN 15	COM	COM
	+V	+V	IN 00	IN 01	IN 02	IN 03	IN 04	IN 05	IN 06	IN 07	IN 10	IN 11	IN 12	IN 13	IN 14	IN 15	IN 16	IN 17	COM	COM
1746-IV16, ITV16			IN 0	IN 1	IN 2	IN 3	IN 4	IN 5	IN 6	IN 7	IN 8	IN 9	IN 10	IN 11	IN 12	IN 13	IN 14	IN 15	+V	+V
			IN 00	IN 01	IN 02	IN 03	IN 04	IN 05	IN 06	IN 07	IN 10	IN 11	IN 12	IN 13	IN 14	IN 15	IN 16	IN 17	+V	+V
1746-OA16, OW16 (AC) 1769-OA16, OW16 (AC)	L1 1	L1 1	OUT 0	OUT 1	OUT 2	OUT 3	OUT 4	OUT 5	OUT 6	OUT 7	OUT 8	OUT 9	OUT 10	OUT 11	OUT 12	OUT 13	OUT 14	OUT 15	L1 2	L1 2
	L1 1	L1 1	OUT 00	OUT 01	OUT 02	OUT 03	OUT 04	OUT 05	OUT 06	OUT 07	OUT 10	OUT 11	OUT 12	OUT 13	OUT 14	OUT 15	OUT 16	OUT 17	L1 2	L1 2
1746-OB16, OB16E, OBP16, OG16, OV16, OVP16 1769-OB16, 0V16	+V	+V	OUT 0	OUT 1	OUT 2	OUT 3	OUT 4	OUT 5	OUT 6	OUT 7	OUT 8	OUT 9	OUT 10	OUT 11	OUT 12	OUT 13	OUT 14	OUT 15	COM	COM
	+V	+V	OUT 00	OUT 01	OUT 02	OUT 03	OUT 04	OUT 05	OUT 06	OUT 07	OUT 10	OUT 11	OUT 12	OUT 13	OUT 14	OUT 15	OUT 16	OUT 17	COM	COM
1746-OW16 (DC) 1769-OW16 (DC)	+V1	+V1	OUT 0	OUT 1	OUT 2	OUT 3	OUT 4	OUT 5	OUT 6	OUT 7	OUT 8	OUT 9	OUT 10	OUT 11	OUT 12	OUT 13	OUT 14	OUT 15	+V2	+V2
	+V1	+V1	OUT 00	OUT 01	OUT 02	OUT 03	OUT 04	OUT 05	OUT 06	OUT 07	OUT 10	OUT 11	OUT 12	OUT 13	OUT 14	OUT 15	OUT 16	OUT 17	+V2	+V2
1746-OX8 (AC) 1769-OW8I (AC)		L1 0	OUT 0	L1 1	OUT 1	L1 2	OUT 2	L1 3	OUT 3		OUT 4	L1 4	OUT 5	L1 5	OUT 6	L1 6	OUT 7	L1 7		
1746-OX8 (DC) 1769-OW8I (DC)		+V0	OUT 0	+V1	OUT 1	+V2	OUT 2	+V3	OUT 3		OUT 4	+V4	OUT 5	+V5	OUT 6	+V6	OUT 7	+V7		
1756-IA8D, TC-IDX081		L1 0	IN 0	IN 1	IN 2	IN 3	L2 0	L2 0	L2 0	L2 0	L2 1	L2 1	L2 1	L2 1	IN 4	IN 5	IN 6	IN 7	L1 1	L2 1
1756-IA16, IN16, TC-IDA161	L2 0	L2 0	IN 0	IN 1	IN 2	IN 3	IN 4	IN 5	IN 6	IN 7	IN 8	IN 9	IN 10	IN 11	IN 12	IN 13	IN 14	IN 15	L2 1	L2 1
1756-IB16, IC16, TC-IDD161, IDE161	GND 0	GND 0	IN 0	IN 1	IN 2	IN 3	IN 4	IN 5	IN 6	IN 7	IN 8	IN 9	IN 10	IN 11	IN 12	IN 13	IN 14	IN 15	GND 1	GND 1
1756-OA8, ON8, TC-ODC081	L1 0	OUT 0	OUT 1	OUT 2	OUT 3		L1 0	L1 0	L1 0	L1 0	L1 1	L1 1	L1 1	L1 1	OUT 4	OUT 5	OUT 6	OUT 7		L1 1

Marking Systems, Continued (Example Label Cards)

Part 2 of Adhesive Label Card for Catalog Numbers 1492-IFM20F, -IFM20D24, and -IFM20D120

1756-OA8D, OA8E, TC-ODX081		L2 0	OUT 0	OUT 1	OUT 2	OUT 3	L1 0	L1 0	L1 0	L1 0	L1 1	L1 1	L1 1	L1 1	OUT 4	OUT 5	OUT 6	OUT 7	L2 1	L1 1
1756-OA16, TC-ODA161	L1 0	L2 0	OUT 0	OUT 1	OUT 2	OUT 3	OUT 4	OUT 5	OUT 6	OUT 7	OUT 8	OUT 9	OUT 10	OUT 11	OUT 12	OUT 13	OUT 14	OUT 15	L1 1	L2 1
1756-OB8, OC8, TC-ODD081, TC-ODE081	+DC 0	OUT 0	OUT 1	OUT 2	OUT 3	RTN 0	+DC 0	+DC 0	+DC 0	RTN 0	+DC 1	+DC 1	+DC 1	+DC 1	OUT 4	OUT 5	OUT 6	OUT 7	RTN 1	RTN 1
1756-OB16E, TC-ODD161	+DC 0	RTN 0	OUT 0	OUT 1	OUT 2	OUT 3	OUT 4	OUT 5	OUT 6	OUT 7	OUT 8	OUT 9	OUT 10	OUT 11	OUT 12	OUT 13	OUT 14	OUT 15	+DC 1	RTN 1
1769-IA8I			IN 0	L2 0	IN 1	L2 1	IN 2	L2 2	IN 3	L2 3	IN 4	L2 4	IN 5	L2 5	IN 6	L2 6	IN 7	L2 7		
1769-IA16	L2	L2	IN 0	IN 1	IN 2	IN 3	IN 4	IN 5	IN 6	IN 7	IN 8	IN 9	IN 10	IN 11	IN 12	IN 13	IN 14	IN 15	L2	L2
1769-IM12			IN 0	IN 1	IN 2	IN 3	IN 4	IN 5	IN 6	IN 7	IN 8	IN 9	IN 10	IN 11					L2	L2
1769-IQ16 SINK	COM 1	COM 1	IN 0	IN 1	IN 2	IN 3	IN 4	IN 5	IN 6	IN 7	IN 8	IN 9	IN 10	IN 11	IN 12	IN 13	IN 14	IN 15	COM 2	COM 2
1769-IQ16 SOURCE	+VDC 1	+VDC 1	IN 0	IN 1	IN 2	IN 3	IN 4	IN 5	IN 6	IN 7	IN 8	IN 9	IN 10	IN 11	IN 12	IN 13	IN 14	IN 15	+VDC 2	+VDC 2
1769-OA8 (AC), OW8	L1 1		OUT 0		OUT 1		OUT 2		OUT 3	L1 1	OUT 4		OUT 5		OUT 6		OUT 7		L1 2	L1 2
1769-OW8 (DC)	+VDC 1		OUT 0		OUT 1		OUT 2		OUT 3	+VDC 1	OUT 4		OUT 5		OUT 6		OUT 7		+VDC 2	+VDC 2
1771-IAD (AC), IND (AC)	L1		IN 00	IN 01	IN 02	IN 03	IN 04	IN 05	IN 06	IN 07	IN 10	IN 11	IN 12	IN 13	IN 14	IN 15	IN 16	IN 17		L2
1771-IMD (AC)			IN 00	IN 01	IN 02	IN 03	IN 04	IN 05	IN 06	IN 07	IN 10	IN 11	IN 12	IN 13	IN 14	IN 15	IN 16	IN 17		L2
1771-IAD (DC), IND (DC)	+V		IN 00	IN 01	IN 02	IN 03	IN 04	IN 05	IN 06	IN 07	IN 10	IN 11	IN 12	IN 13	IN 14	IN 15	IN 16	IN 17		COM
1771-IMD (DC)			IN 00	IN 01	IN 02	IN 03	IN 04	IN 05	IN 06	IN 07	IN 10	IN 11	IN 12	IN 13	IN 14	IN 15	IN 16	IN 17		COM
1771-IBD, ICD			IN 00	IN 01	IN 02	IN 03	IN 04	IN 05	IN 06	IN 07	IN 10	IN 11	IN 12	IN 13	IN 14	IN 15	IN 16	IN 17		COM
1771-IGD	+V	+V	IN 00	IN 01	IN 02	IN 03	IN 04	IN 05	IN 06	IN 07	IN 10	IN 11	IN 12	IN 13	IN 14	IN 15	IN 16	IN 17	+V	COM
1771-OAD, OND, OMD	L1	L1	OUT 00	OUT 01	OUT 02	OUT 03	OUT 04	OUT 05	OUT 06	OUT 07	OUT 10	OUT 11	OUT 12	OUT 13	OUT 14	OUT 15	OUT 16	OUT 17	L1	L2
1771-OBD, OGD	+V	+V	OUT 00	OUT 01	OUT 02	OUT 03	OUT 04	OUT 05	OUT 06	OUT 07	OUT 10	OUT 11	OUT 12	OUT 13	OUT 14	OUT 15	OUT 16	OUT 17	+V	COM
NUMERIC	1	2	3	4	5	6	7	8	9	10	11	12	13	14	15	16	17	18	19	20
LED LABEL			00	01	02	03	04	05	06	07	10	11	12	13	14	15	16	17		
			1	2	3	4	5	6	7	8	9	10	11	12	13	14	15	16		

Accessories

Catalog Number 1492-IFMFH1
Fuse Holder

Catalog Number 1492-ISOSW-1
Isolation Switch Fuse Plug

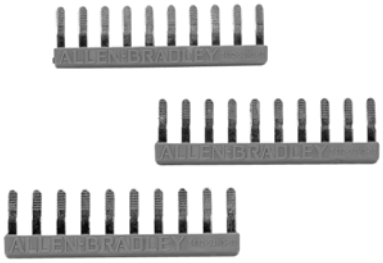

Catalog Number 1492-SJM5-10
Insulated Side Jumper

Replacement Fuse Holders

IFM

The 1492-IFMFH1 fuse holders accommodate either a 5 x 20 mm fuse or the Catalog Number 1492-ISOSW-1 isolation switch plug and reside in the IFM or AIFM under normal operation. All of the fusible Bulletin 1492 IFMs and AIFMs come standard with fuse holders (for the number of fuse holders included, refer to the specifications for each IFM or AIFM).

Replacement fuse holders (Catalog Number 1492-IFMFHI) are available in packages of 20. Catalog Number 1492-IFMFHI fuse holders are not compatible with fusible expandable XIMs.

Accessories, Continued

Replacement Fuse Holders, Continued

AIFM

The Catalog Number 1492-IFMFH1 fuse holders accommodate a 5 x 20 mm fuse or the Catalog Number 1492-ISOSW-1 isolation switch fuse plug and reside in the AIFM under normal operation. All of the fusible Catalog Number 1492 AIFMs come standard with the fuse holders — 10 fuse holders with the Catalog Number 1492-AIFM4C-F-5, -AIFM4I-F-5, and -AIFM8-F-5 modules; 20 fuse holders with the Catalog Number 1492-AIFM16-F-3, and -AIFM16-F-5 modules. Replacement fuse holders are available in packages of 20.

Replacement Relays

The relays in the Relay Master and Relay Expander modules are replaceable. The following replacement relays must be used:

Replacement Relays

XIM Catalog Number	Replacement Part Catalog Number
1492-XIM4024-16R, -16RF	700-HK36Z24
1492-XIM4024-8R	700-HK36Z24
1492-XIM2024-8R, -16R	700-HK36Z24
1492-XIM20120-8R, -16R, -16RF	700-HK36A1
1492-XIM24-8R, -16RF	700-HK36Z24
1492-XIM120-8R	700-HK36A1
Flexible Relay Module Expansion Cable	W22101-061-01

Isolation Switch Plugs

The Catalog Number 1492-ISOSW-1 is an isolation switch or “dummy fuse” in a 5 x 20 mm fuse form factor. The isolation switch plugs will fit into the Catalog Number 1492-IFMFH1 fuse holders. If fusing is not desired on a fusible IFM or AIFM, the Catalog Number 1492-ISOSW-1 isolating switch can be used to provide feed-through functionality under normal operation and isolation switch functionality once power has been removed from the circuit. The isolation switch can then be opened for maintenance and troubleshooting. Metering equipment can also be inserted into a two-wire transmitter circuit to measure input loop current. The Catalog Number 1492-ISOSW-1 isolation switch plugs are available in packages of four.

Accessories, Continued

Insulated Side Jumpers

The Catalog Number 1492-SJM5-10 is a 10-pole "comb-style" insulated side jumper. A side cutter can be used to cut the 10-pole jumper into smaller pole assemblies. The jumper fits the field-side terminal spacings on all of the Bulletin 1492 IFMs and AIFMs. Use of this jumper is a convenient means of connecting unused inputs together on the feed-through. The Catalog Number 1492-SJM5-10 insulated side jumpers are available in packages of 10.

Web Site Information

Wiring diagrams are provided on-line if you require additional information to wire your field device to the terminals of the IFM, XIM or AIFM wiring system modules.

Visit the following web site for I/O wiring diagrams of the Interface Modules and cables:

1. http://www.ab.com/raise
2. Type in the catalog number of the IFM/XIM or AIFM you are interested in. Click on "Submit."
3. Click on the Modify key (lower left).
4. Click on the areas that indicate NO SELECTION and enter your information (e.g, I/O Platform, I/O Module, etc.).
5. To obtain the wiring diagram, be sure to select the Pre-Wired Cable Connector selection.
6. Configure the 1492 cable for your application by filling in the NO SELECTION areas.
7. Click on the Accept key for the 1492 cable.
8. Click on the Accept key for the 1492 wiring system module (E.g., 1492-IFM20F).
9. The configuration results page is displayed. In the selected components table column "Supplementary Documents," click on the "Wiring Diagram for the I/O Module to IFM."

Quick Reference

Digital IFM Specifications

Digital IFM Catalog Number	Voltage Range	Max. Current (Per Circuit)	Max. Current (Per Module)	Dimensions (W x H x D) (in.)❶	Indicator Circuit Current (Nominal)	Label Card Replacement Part Catalog Number ❷
1492-IFM20F, -RIFM20F	0…264V AC/DC	2 A	12 A	4.33 x 3.27 x 2.78❸	—	46006-190-01, 46006-233-01
1492-IFM20FN, -RIFM20FN	0…132V AC/DC	2 A	12 A	2.36 x 3.27 x 2.78❸	—	46006-197-01, -237-01, -220-01
1492-IFM20F-2, -RIFM20F-2	0…264V AC/DC	2 A	12 A	4.33 x 3.27 x 2.78❸	—	46006-192-01, -235-01, -221-01
1492-IFM20F-3	0…132V AC/DC	2 A	12 A	4.33 x 3.27 x 2.78	—	46006-210-01
1492-IFM20D24	10…30V AC/DC	2 A	12 A	4.33 x 3.27 x 2.78	2 mA	46006-190-01, 46006-233-01
1492-IFM20D24N	10…30V AC/DC	2 A	12 A	2.36 x 3.27 x 2.78	2 mA	46006-197-01, -237-01, -220-01
1492-IFM20D24-2	10…30V AC/DC	2 A	12 A	4.33 x 3.27 x 2.78	2 mA	46006-192-01, -235-01, -221-01
1492-IFM20D24A-2	10…30V AC/DC	2 A	12 A	4.33 x 3.27 x 2.78	2 mA	46006-211-01
1492-IFM20DS24-4	10…60V AC/DC	2 A	12 A	4.33 x 3.27 x 2.78	1.6 mA	46006-209-01
1492-IFM20D24-3	10…30V AC/DC	2 A	12 A	4.33 x 3.27 x 2.78	2 mA	46006-193-01, 46006-236-01
1492-IFM20D120	85…132V AC/DC	2 A	12 A	4.33 x 3.27 x 2.78	2.5 mA	46006-190-01, 46006-233-01
1492-IFM20D120N	85…132V AC	2 A	12 A	2.36 x 3.27 x 2.78	2.5 mA	46006-197-01, -237-01, -220-01
1492-IFM20D120-2	85…132V AC	2 A	12 A	4.33 x 3.27 x 2.78	2.5 mA	46006-192-01, -235-01
1492-IFM20D120A-2	85…132V AC	2 A	12 A	4.33 x 3.27 x 2.78	2.5 mA	46006-211-01
1492-IFM20DS120-4	85…132V AC	2 A	12 A	4.33 x 3.27 x 2.78	2.6 mA	46006-209-01
1492-IFM20D240-2	204…264V AC	2 A	12 A	4.33 x 3.27 x 2.78	2.5 mA	46006-192-01, -235-01
1492-IFM20D240A-2	204…264V AC	2 A	12 A	4.33 x 3.27 x 2.78	2.5 mA	46006-211-01
1492-IFM20F-F-2, -RIFM20F-F-2	0…132V AC/DC	2 A	12 A	4.33 x 3.27 x 2.78❸	—	46006-192-01, -235-01, -221-01
1492-IFM20F-F24-2, -RIFM20F-F24-2	10…30V AC/DC	2 A	12 A	4.33 x 3.27 x 2.78❸	2 mA	46006-192-01, -235-01, -221-01
1492-IFM20F-F24A-2, -RIFM20F-F24A-2	10…30V AC/DC	2 A	12 A	4.33 x 3.27 x 2.78❸	2.4 mA	46006-212-01, -189-01
1492-IFM20F-F120-2, -RIFM20F-F120-2	85…132V AC/DC	2 A	12 A	4.33 x 3.27 x 2.78❸	2.5 mA	46006-192-01, -235-01, -221-01
1492-IFM20F-F120A-2, -RIFM20F-F120A-2	85…132V AC/DC	2 A	12 A	4.33 x 3.27 x 2.78❸	1.2 mA	46006-212-01, -189-01
1492-IFM20F-F240-2	204…264V AC/DC	2 A	12 A	4.72 x 3.27 x 2.78	1.2 mA	46006-192-01, -235-01
1492-IFM20F-FS-2	0…132V AC/DC	2 A	12 A	2.36 x 3.27 x 2.78	—	46006-204-01
1492-IFM20F-FS24-2	10…30V AC/DC	2 A	12 A	2.36 x 3.27 x 2.78	2 mA	46006-204-01
1492-IFM20F-FS24A-4	10…30V AC/DC	2 A	12 A	3.15 x 3.27 x 2.78	2.4 mA	46006-215-01
1492-IFM20F-FS120-2	85…132V AC/DC	2 A	12 A	2.36 x 3.27 x 2.78	2.5 mA	46006-204-01
1492-IFM20F-FS120-4	85…132V AC/DC	2 A	12 A	4.33 x 3.27 x 2.78	1.2 mA	46006-214-01
1492-IFM20F-FS120A-4	85…132V AC/DC	2 A	12 A	3.15 x 3.27 x 2.78	2.2 mA	46006-215-01
1492-IFM20F-FS240-4	204…264V AC/DC	2 A	12 A	4.33 x 3.27 x 2.78	1.2 mA	46006-214-01
1492-IFM40F, -RIFM40F	0…132V AC/DC	2 A	12 A	4.33 x 3.27 x 2.78❸	—	46006-191-01, -234-01, 252-01
1492-IFM40F-2	0…132V AC/DC	2 A	12 A	8.27 x 3.27 x 2.78	—	46006-224-01, -225-01, -239-01, -240-01, -194-01, -195-01, -253-01
1492-RIFM40F-2	0…132V AC/DC	2A	12A	8.27 x 3.27 x 2.78	—	46006-224-01, -225-01, -239-01, -240-01, -194-01, -195-01, -253-01
1492-IFM40F-3	0…60V AC/DC	2 A	12 A	8.27 x 3.27 x 2.78	—	46006-193-01, 46006-236-01
1492-IFM40D24, -RIFM40D24	10…30V AC/DC	2 A	12 A	4.33 x 3.27 x 2.78❸	2 mA	46006-191-01, -234-01, -252-01
1492-IFM40D24-2	10…30V AC/DC	2 A	12 A	8.27 x 3.27 x 2.78	2 mA	46006-194-01, -195-01, -253-01
1492-IFM40D24A-2	10…30V AC/DC	2 A	12 A	8.27 x 3.27 x 2.78	2 mA	46006-224-01, -225-01, -239-01, -240-01, -194-01, -195-01, -253-01
1492-RIFM40D24A-2	10…30V AC/DC	2A	12A	8.27 x 3.27 x 2.78	2 mA	46006-224-01, -225-01, -239-01, -240-01, -194-01, -195-01, -253-01
1492-IFM40DS24-4	10…60V AC/DC	2 A	12 A	6.69 x 3.27 x 2.78	4.1 mA	46006-208-01
1492-IFM40DS24A-4	10…30V AC/DC	2 A	12 A	6.69 x 3.27 x 2.78	4.1 mA	46006-208-01
1492-IFM40D24-3	10…30V AC/DC	2 A	12 A	8.27 x 3.27 x 2.78	2 mA	46006-193-01, 46006-236-01

Digital IFM Specifications (Continued)

Digital IFM Catalog Number	Voltage Range	Max. Current (Per Circuit)	Max. Current (Per Module)	Dimensions (W x H x D) (in.)❶	Indicator Circuit Current (Nominal)	Label Card Replacement Part Catalog Number ❷
1492-IFM40D120-2	85…132V AC	2 A	12 A	8.27 x 3.27 x 2.78	2.5 mA	46006-194-01, -195-01, -253-01
1492-IFM40D120A-2	85…132V AC	2 A	12 A	8.27 x 3.27 x 2.78	2.5 mA	46006-194-01, -195-01, -253-01
1492-IFM40DS120-4	85…132V AC	2 A	12 A	6.69 x 3.27 x 2.78	2.6 mA	46006-208-01
1492-IFM40DS120A-4	85…132V AC	2 A	12 A	6.69 x 3.27 x 2.78	2.6 mA	46006-208-01
1492-IFM40DS240A-4	204…264V AC	2 A	12 A	6.69 x 3.27 x 2.78	2.6 mA	46006-208-01
1492-IFM40F-F-2	0…132V AC/DC	2 A	12 A	8.27 x 3.27 x 2.78	—	46006-194-01, -195-01, -253-01
1492-IFM40F-F24-2	10…30V AC/DC	2 A	12 A	8.27 x 3.27 x 2.78	2 mA	46006-224-01, -225-01, -239-01, -240-01, -194-01, -195-01
1492-RIFM40F-F24-2	10…30V AC/DC	2 A	12A	8.27 x 3.27 x 2.78	2 mA	46006-224-01, -225-01, -239-01, -240-01, -194-01, -195-01
1492-IFM40F-F24D-2	10…30V DC	2 A	8 A	4.72 x 3.27 x 2.78	<0.05 mA	46006-201-01
1492-IFM40F-F24AD-4	10…30V DC	2 A	8 A	7.09 x 3.27 x 2.78	<0.05 mA	46006-206-01
1492-IFM40F-F120-2	85…132V AC/DC	2 A	12 A	8.27 x 3.27 x 2.78	2.5 mA	46006-194-01, -195-01, -253-01
1492-IFM40F-FS-2	0…132V AC/DC	2 A	12 A	4.72 x 3.27 x 2.78	—	46006-201-01
1492-IFM40F-FS24-2	10…30V AC/DC	2 A	12 A	4.72 x 3.27 x 2.78	2 mA	46006-201-01
1492-IFM40F-FS24-4	10…30V AC/DC	2 A	12 A	7.09 x 3.27 x 2.78	2.4 mA	46006-207-01
1492-IFM40F-FS120-2, -RIFM40F-FS120-2	85…132V AC/DC	2 A	12 A	4.72 x 3.27 x 2.78	2.5 mA❸	46006-201-01
1492-IFM40F-FS120-4	85…132V AC/DC	2 A	12 A	7.09 x 3.27 x 2.78	1.4 mA	46006-206-01
1492-RIFM40F-FS120-4	85…30V AC/DC	2A	12A	7.09 x 3.27 x 2.78	1.4 mA	46006-226-01
1492-IFM40F-FS240-4	204…264V AC/DC	2 A	12 A	7.09 x 3.27 x 2.78	2.4 mA	46006-207-01
1492-IFM40F-FS24A-4	10…30V AC/DC	2 A	12 A	7.09 x 3.27 x 2.78	3.1 mA	46006-226-01
1492-IFM40F-FS120A-4	85…132V AC/DC	2 A	12 A	7.09 x 3.27 x 2.78	1.4 mA	46006-226-01
1492-RIFM40F-FS120A-4	85…30V AC/DC	2A	12A	7.09 x 3.27 x 2.78	1.4 mA	46006-226-01
1492-IFM40F-FS-4	0...264V AC/DC	2 A	12 A	7.09 x 3.27 x 2.78	—	46006-207-01
1492-IFM40F-FSA-4	0…132V AC/DC	2 A	12 A	7.09 x 3.27 x 2.78	—	46006-226-01
1492-IFM40F-FS240A-4	159...265V AC/DC	2 A	12 A	7.09 x 3.27 x 2.78	1.4 mA	46006-226-01

❶ Dimensions are in inches. To convert to millimeters, multiply inches by 25.4.

❷ Ships with each module. For spare part, precede part number with the letter "W."

❸ Add 0.39 in. to the width dimension for Bul. 1492Rxxx module.

Analog IFM Specifications

Analog IFM Catalog Number	Voltage Range	Max. Current (Per Circuit)	Max. Current (Per Module)	Dimensions (W x H x D) (in.) ❶	Indicator Circuit Current (Nominal)	Label Card Replacement Part Catalog Number ❷
1492-AIFM4-3, -RAIFM4-3	0…10V DC	2 A	12 A	2.36 x 3.27 x 2.74	—	46006-205-01
1492-AIFM4C-F-5	10…30V DC	2 A	12 A	3.15 x 3.27 x 2.74	2 mA	46006-203-01
1492-AIFM4I-F-5	10…30V DC	2 A	12 A	3.15 x 3.27 x 2.74	2 mA	46006-203-01
1492-AIFM6S-3, -RAIFM6S-3	0…132V AC/DC	2 A	12 A	3.15 x 3.27 x 2.74	—	46006-202-01
1492-AIFM6TC-3	0…132V AC/DC	2 A	12 A	3.15 x 3.27 x 2.74	—	46006-202-01
1492-AIFMCE4	5…30V DC	2 A	8 A	5.12 x 3.27 x 2.74	—	46006-232-01
1492-AIFMCE4-F	5…30V DC	2 A	8 A	5.12 x 3.27 x 2.74	1 mA @ 5V DC 6 mA @ 24V DC	46006-232-01
1492-AIFM8-3, -RAIFM8-3	0…132V AC/DC	2 A	12 A	4.33 x 3.27 x 2.74	—	46006-200-01, 46006-238-01
1492-AIFM8-F-5	10…30V DC	2 A	12 A	4.72 x 3.27 x 2.74	2 mA	46006-196-01, -254-01
1492-AIFM16-F-3	10…30V DC	2 A	12 A	4.72 x 3.27 x 2.74	2 mA	46006-213-01
1492-AIFM16-F-5	10…30V DC	2 A	12 A	8.27 x 3.27 x 2.74	2 mA	46006-198-01
1492-AIFMQS	10…30V DC	3 A	12 A	4.72 x 3.27 x 2.74	—	46006-199-01
1492-AIFMPI	0…30V DC	2 A	12 A	4.72 x 3.27 x 2.74	2 mA	46006-243-01

❶ Dimensions are in inches. To convert to millimeters, multiply inches by 25.4.

❷ Ships with each module. For spare part, precede part number with the letter "W."

Quick Reference, Continued

Relay Master/Expandable Interface Module Specifications ❶

Relay Master/Expandable XIM Catalog Number	Relay Coil Voltage Range	Max. Current (Per Circuit/ Per Relay Pair)	Max. Current (Per Module)	Dimensions (W x H x D) (in.) ❶	Indicator Circuit Current (Nominal)	Label Card Replacement Part Catalog Number ❷
1492-XIM4024-16R, -RXIM4024-16R	20…26V DC	10/12 A	96 A	9.06 x 3.27 x 2.78	2 mA	46006-222-01
1492-XIM4024-8R	20…26V DC	10/12 A	48 A	6.30 x 3.27 x 2.78	2 mA	46006-216-01
1492-XIM2024-8R	20…26V DC	10/12 A	48 A	6.30 x 3.27 x 2.78	2 mA	46006-216-01
1492-XIM20120-8R	96…132V AC	10/12 A	48 A	6.30 x 3.27 x 2.78	2 mA	46006-216-01
1492-XIM24-8R, -RXIM24-8R	20…26V DC	10/12 A	48 A	6.30 x 3.27 x 2.78	2 mA	46006-217-01
1492-XIM120-8R	96…132V AC	10/12 A	48 A	6.30 x 3.27 x 2.78	2 mA	46006-217-01
1492-XIM2024-16R	20...26V DC	10/12 A	96 A	10.65 x 3.27 x 2.78	2 mA	46006-223-01
1492-XIM2024-16RF	20...26V DC	10/12 A	96 A	10.65 x 3.27 x 2.78	2 mA	46006-223-01
1492-XIM20120-16R	96...132V AC	10/12 A	96 A	10.65 x 3.27 x 2.78	2 mA	46006-223-01
1492-XIM20120-16RF	96...132V AC	10/12 A	96 A	10.65 x 3.27 x 2.78	2 mA	46006-223-01
1492-XIM4024-16RF	20...26V DC	10/12 A	96 A	11.05 x 3.27 x 2.78	2 mA	46006-223-01
1492-XIMF-2	0…132V AC/DC	2/NA A	4 A	3.15 x 3.27 x 2.19	—	46006-218-01
1492-XIMF-F24-2	10…30V DC	2/NA A	4 A	3.15 x 3.27 x 2.28	2 mA	46006-218-01
1492-XIMF-F120-2	85…132V AC	2/NA A	4 A	3.15 x 3.27 x 2.28	2 mA	46006-218-01
1492-XIM24-16RF	20...26V DC	10/12 A	96 A	11.05 x 3.27 x 2.78	2 mA	46006-219-01

❶Dimensions are in inches. To convert to millimeters, multiply inches by 25.4.

❷Ships with each module. For spare part, precede part number with the letter "W."

1764-24AWA and -24BWA Base Unit Output Current Ratings when using 1492-IFM20x Modules

IFM Cat. Number	Voltage Range	1764-24AWA & 24BWA Max. Current/Output using IFM	Max. Current per IFM Module	IFM Module Indicator Circuit Current	Operating Ambient Temperature
1492-IFM20F	0…264V AC	(Out 0-Out 3) 2 Amps	12 Amps	NA	0°C to 60°C
	10…125V DC	(Out 4-Out 11) 1 Amps			
1492-IFM20FN	0…132V AC	(Out 0-Out 3) 2 Amps	12 Amps	NA	0°C to 60°C
	10…125V DC	(Out 4-Out 11) 1 Amps			
1492-IFM20F-2	0…264V AC	(Out 0-Out 3) 2 Amps	12 Amps	NA	0°C to 60°C
	10…125V DC	(Out 4-Out 11) 1 Amps			

Note: For inputs use standard 2 A/circuit ratings

1764-28BXB Base Unit Output Current Ratings when using 1492-IFM20x Modules

IFM Cat. Number	Voltage Range	1764-2BXB Max. Current/Output using IFM	Max. Current per IFM Module	IFM Module Indicator Circuit Current	Operating Ambient Temperature
1492-IFM20F	0…264V AC	(Out 0-Out 1) 2 AMP	12 Amps	NA	0°C to 60°C
	10…125V DC	(Out 8-Out 11) 1 AMP			
	24V DC	(Out 2-Out 7) 0.5 AMP			
1492-IFM20FN	0…132V AC	(Out 0-Out 1) 2 AMP	12 Amps	NA	0°C to 60°C
	10…125V DC	(Out 8-Out 11) 1 AMP			
	24V DC	(Out 2-Out 7) 0.5 AMP			
1492-IFM20F-2	0…264V AC	(Out 0-Out 1) 2 AMP	12 Amps	NA	0°C to 60°C
	10…125V DC	(Out 8-Out 11) 1 AMP			
	24V DC	(Out 2-Out 7) 0.5 AMP			

Note: For inputs use standard 2 A/circuit ratings

1762-L40AWA and -L40BWA Base Unit Output Current Ratings when using 1492-IFM40x Module

IFM Cat. Number	Voltage Range	1762-L40AWA & -L40BWA max. Current/Output using IFM	Max. Current per IFM Module	IFM Module Indicator Circuit Current	Operating Ambient Temperature
1492-IFM40F	0…132V AC	(Out 0-Out 3) 2 Amps	12 Amps	NA	0°C to 60°C
	10…125V DC	(Out 4-Out 15) 1 Amps			
1492-IFM40F-2	0…264V AC	(Out 0-Out 3) 2 Amps	12 Amps	NA	0°C to 60°C
	10…125V DC	(Out 4-Out 15) 1 Amps			

Note: For inputs use standard 2 A/circuit ratings.

1762-L40BXB Output Current Ratings when using 1492-IFM40x Modules

IFM Cat. Number	Voltage Range	1762-L40BXB Max. Current/Output using IFM	Max. Current per IFM Module	IFM Module Indicator Circuit Current	Operating Ambient Temperature
1492-IFM40F	0…132V AC	(Out 0,1,10,11) 2 AMP	12 Amps	NA	0°C to 60°C
	10…125VD C	(Out 12-Out 15) 1 AMP			
	24V DC	(Out 2-Out 9) 0.5 AMP			
1492-IFM40F-2	0…264V AC	(Out 0,1,10,11) 2 AMP	12 Amps	NA	0°C to 60°C
	10…125V DC	(Out 12-Out 15) 1 AMP			
	24V DC	(Out 2-Out 9) 0.5 AMP			

Note: For inputs use standard 2 A/circuit ratings.

General Wiring System Specifications

Parameter	Specifications
Agency Certifications: Modules and Cables	cULus: Hazardous Locations; Class I Div 2 (all modules, except those with relays); Groups A, B, C, and D. Temperature Code T3C @ 60°C. UL File E10314, Guide No. NRAG
	cULus: Ordinary Locations; Module with relays, UL File E113724, Guide No. NRAQ
Agency Certification Modules	Factory Mutual (FM): Hazardous Locations; Class I Di v 2 (all except modules with relays); Groups A, B, C, and D. Temperature Rating: T3C @ 60°C. FM file J.I.3000590
CE Certifications	Compliant for all applicable directives
Maximum Peak Transient Voltage	600V ❶
Terminal Block Wire Range (Rated Cross Section)	Fixed Screw Style: #12…#22 AWG (4.0...0.2 mm^2) Removable Screw Style: #12 to #22 AWG 2.5...0.5 mm^2) Removable Push-in Style: #12 to #26 AWG (2.5...0.2mm^2)
Wire Strip Length	Fixed Screw Style:.32 in. (8.0 mm) Removable Screw Style:.28 in. (7.0 mm) Removable Push-in Style:.39 in. (10.0 mm)
Recommended Terminal Block Screw Torque	Fixed Screw Style: 3.5…4.5 lb-in. (0.38…0.50 Nm) Removable Screw Style: 3.5…4.5 lb-in. (0.38…0.50 Nm) Removable Push-in Style: NA (See Figure 1)
Operating Temperature Range	0…+60°C
Operating Humidity	5% to 95% non-condensing
Storage Temperature Cables	-20…+80°C
Storage Temperature Modules	-40…+85°C
Pollution Degree	2 ❷

❶ For transients > 600V use a UL Recognized suppression device rated at 2.5 kV withstand.
❷ Pollution Degree 2 is an environment where normally only non-conduction pollution occurs, except for occasional temporary conductivity caused by condensation shall be expected.

Fixed Screw Style Terminal Block

Max. AWG	#22	#20	#18	#16	#14	#12
Max. No. of Wires per Terminal ❶	3	3	3	2	1	1

❶ Maximum number of the same gauge of wire stranded copper conductors allowed per wire funnel

Figure 1 — Push-in RTB Plug Specifications

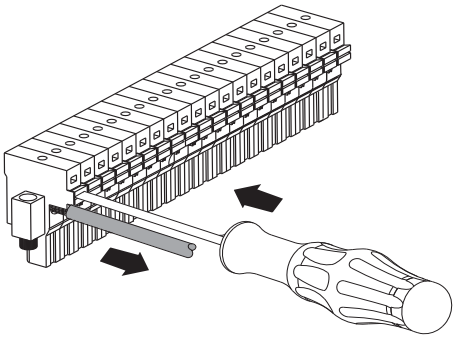

Single wire per pole (except by using a ferrule)

For Insertion

- Solid wire: actuator not required
- Stranded wire: actuator required

For Removal

- Solid or stranded wire: actuator required

Clamp Range:

AWG conductor: 26...12 AWG

Solid Wire	0.2 ... 2.5 mm^2
Stranded Wire	0.2 ... 2.5 mm^2
Ferrule	0.2 ... 2.5 mm^2
Ferrule w/ plastic collar	0.2 ... 1.5 mm^2

Maximum Switching Capacity

Relay Contact Rating

Electrical Ratings: Cat. No. 700-HK36___ ❷			
Rated Thermal Current (I_{th})		1-pole, 1 CO, SPDT - 16 A ❶	
Rated Thermal Current (*UI*)		250V IEC, 300V UL/CSA ❶	
Electrical Ratings of Contacts	**Inductive VAC**	120VAC	AC-15, 6.2 A B300 Pilot duty, 3 A 1/3 Hp (0.24 kW) 1-phase
		240VAC	AC-15, 3.1 A B300 Pilot duty, 1.5A 3/4 Hp (0.55 kW) 1-phase
		230VAC	0.55 kW 1-phase
	Inductive VDC	24VDC	DC-13, 5.0 A
		125VDC	DC-13, 0.2 A R300 Pilot Duty, 0.22 A
		250VDC	DC-13, 0.1 A R300 Pilot duty, 0.11 A
	Resistive	23VAC	AC-1, 16 A ❶
		277VAC	16A General use ❶
	Make, Break, and Continuous	30VDC	DC-1, 12 A 10 A, Resistive
Minimum Permissible Contact Rating		300 mW (5V/60 mA or 60V/5 mA) for silver contacts	

❶ Maximum module current:
-10 Amp per relay output
-12 Amps per 2 adjacent relay outputs

❷ Replacement relays:
-24V DC control (coil) voltage (Cat. No. 700-HK36Z24)
-120V AC control (coil) voltage (Cat. No. 700-HK36A1)

Bul. 700-HK36 SPDT
Electrical Life (AC Loads) vs. Contact Life

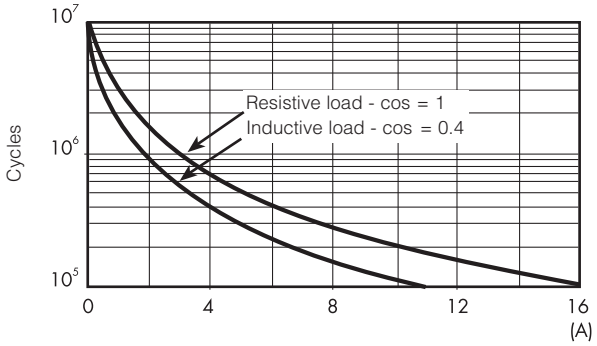

Bul. 700-HK36 Maximum DC1 Breaking Capacity
Electrical Life (DC Loads) vs. Contact Life

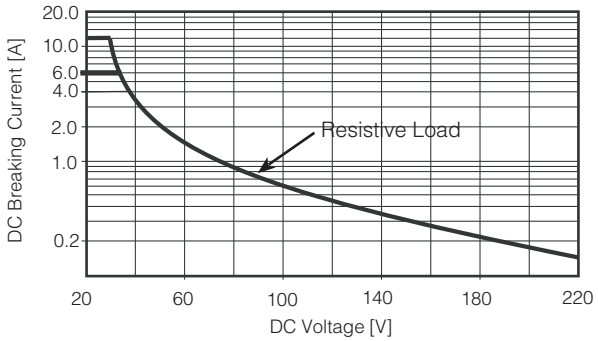

- When switching a resistive load (DC1) having voltage and current values under the curve, an electrical life of ≥ 100 x 10^3 can be expected.
- In case of inductive loads (DC13), the connection of a diode in parallel with the load will permit a similar electrical life as for a DC1 load.
  Note: The release time for the load will be increased.

www.rockwellautomation.com

Power, Control and Information Solutions Headquarters

Americas: Rockwell Automation, 1201 South Second Street, Milwaukee, WI 53204 USA, Tel: (1) 414.382.2000, Fax: (1) 414.382.4444

Europe/Middle East/Africa: Rockwell Automation, Vorstlaan/Boulevard du Souverain 36, 1170 Brussels, Belgium, Tel: (32) 2 663 0600, Fax: (32) 2 663 0640

Asia Pacific: Rockwell Automation, Level 14, Core F, Cyberport 3, 100 Cyberport Road, Hong Kong, Tel: (852) 2887 4788, Fax: (852) 2508 1846

Publication 1492-TD008D-EN-P — January 2009
Supercedes Publication 1492-TD008C-EN-P — September 2005

Copyright ©2009 Rockwell Automation, Inc. All Rights Reserved. Printed in USA.